PFEIFFER
VACUUM+FAB SOLUTIONS

Part of the BUSCH GROUP

COBRA

Dry Screw Vacuum Pumps
COBRA DS 0080-2000 G

Instruction Manual



CE UK CA

2000248111 | A0_en-US | Original instructions

2026/10/08

Table of Contents

1 Preface 4

1.1 Congratulations on your purchase 4

2 Product Description 5

2.1 Use 13

2.2 Operating Principle 13

2.2.1 COMBI 13

2.2.2 Gas Flow Checks 14

2.3 Oil Circuit 14

2.4 Cooling 14

2.5 Nitrogen System 14

2.6 Optional Functions / Use of Available Accessories 15

2.7 On / Off Switch 15

2.8 Versions 15

3 Safety 16

3.1 Intended Use 16

3.2 Safety Information 16

3.3 Safety Stickers 17

3.4 Sound Pressure Emission 18

3.5 Safety Area 18

3.6 Seismic Zone Installation 18

3.7 Information over Lubricants 18

3.7.1 Oil 18

3.7.2 Cooling Liquid 19

3.8 Decommissioning Procedure 19

4 Transport 20

4.1 Transport in Packed State 20

4.2 Transport in Unpacked State 20

5 Storage 22

5.1 Temporary Storage 22

5.2 Vacuum Pump Removal 22

5.3 Preservation 22

5.3.1 Vacuum Pump Start-up after Storage 22

6 Installation and Commissioning 23

6.1 Installation Prerequisites 23

6.1.1 Local Installation 23

6.1.2 Inlet Connection 25

6.1.3 Exhaust Connection 26

6.1.4 Cooling Water Connection 26

6.1.5 Nitrogen Connection 26

6.1.6 Electrical Connection/ Checks 27

6.2 Installation 27

6.2.1 Mounting 27

6.2.2 Electrical Connection 27

6.2.3 Equipment Connections (with Options) 30

6.2.4 Lines / Pipes Connection 31

6.2.5 Oil Filling 31

6.2.6 Cooling Liquid Filling 35

6.2.7 Direct Cooling Checking 36

6.2.8 Nitrogen Supply Checking 37

6.2.9 Operating Parameters Saving ... 37
6.3 Recommendations on Operation ... 37
6.3.1 Application ... 37
6.3.2 Switching the Vacuum Pump On/ Off ... 39
7 Maintenance ... 41
7.1 Maintenance Schedule ... 42
7.1.1 Lock Out/ Tag Out Procedure ... 44
7.1.2 Safety Lockout Procedure ... 44
7.2 Oil Checking ... 44
7.2.1 Oil Level Checking ... 44
7.2.2 Oil Refilling ... 45
7.2.3 Oil Color Inspection ... 46
7.2.4 Oil Change ... 47
7.3 Cooling Liquid Checking ... 50
7.3.1 Cooling Liquid Level Checking ... 50
7.3.2 Cooling Liquid Refilling ... 50
7.3.3 Cooling Liquid Draining ... 51
7.3.4 New Cooling Liquid Filling ... 52
7.4 Additional Checking ... 52
8 Overhaul ... 54
9 Removal from Service ... 55
9.1 Temporary Removal from Service ... 55
9.2 Recommissioning ... 55
9.3 Dismantling and Disposal ... 56
10 Spare Parts ... 57
11 Troubleshooting ... 58
12 Oil Type / Quantity ... 60
12.1 Oil Type ... 60
12.2 Oil Quantity ... 60
13 Cooling Liquid Type / Quantity ... 61
13.1 Cooling Liquid Type ... 61
13.2 Cooling Liquid Quantity ... 61
14 Technical Data ... 62
15 EU Declaration of Conformity ... 64
16 UK Declaration of Conformity ... 65

1 Preface

1.1 Congratulations on your purchase

Congratulations on your purchase of COBRA DS vacuum pump. With watchful observation of the field’s requirements, innovation and steady development, we deliver modern vacuum and pressure solutions worldwide.

These operating instructions contain information for

- product description,
- safety,
- transport,
- storage,
- installation and commissioning
- maintenance,
- overhaul and
- troubleshooting

of the vacuum pump.

For the purpose of these instructions, “handling” the vacuum pump means the transport, storage, installation, commissioning, influence on operating conditions, maintenance, troubleshooting and overhaul of the vacuum pump.

Prior to handling the vacuum pump these operating instructions shall be read and understood. If anything remains to be clarified, please contact your manufacturer representative.

Keep these operating instructions and, if applicable, other pertinent operating instructions available on site.

2 Product Description

COBRA DS 0080 / 0160 G

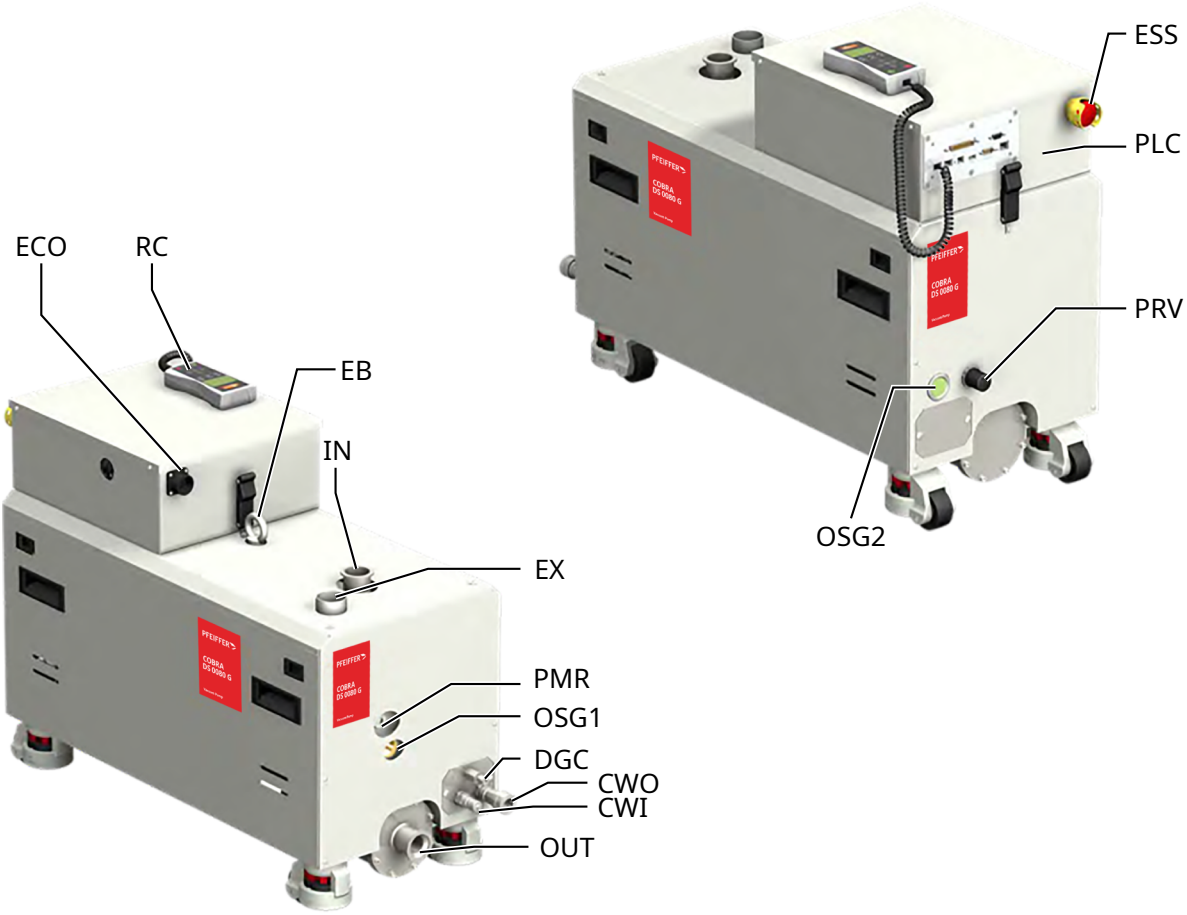

Description			
IN	Inlet connection (Inlet)	OUT	Exhaust connection (Outlet)
CWI	Cooling water inlet connection	CWO	Cooling water outlet connection
DGC	Dilution gas connection	ECO	Electrical power connection
EB	Lifting eyebolt	ESS	Emergency stop switch
EX	Ventilating duct	OSG1	Oil sight glass
OSG2	Oil sight glass	PMR	Unblocking for screw
PLC	PLC box	PRV	Pressure regulating valve
RC	Remote control		

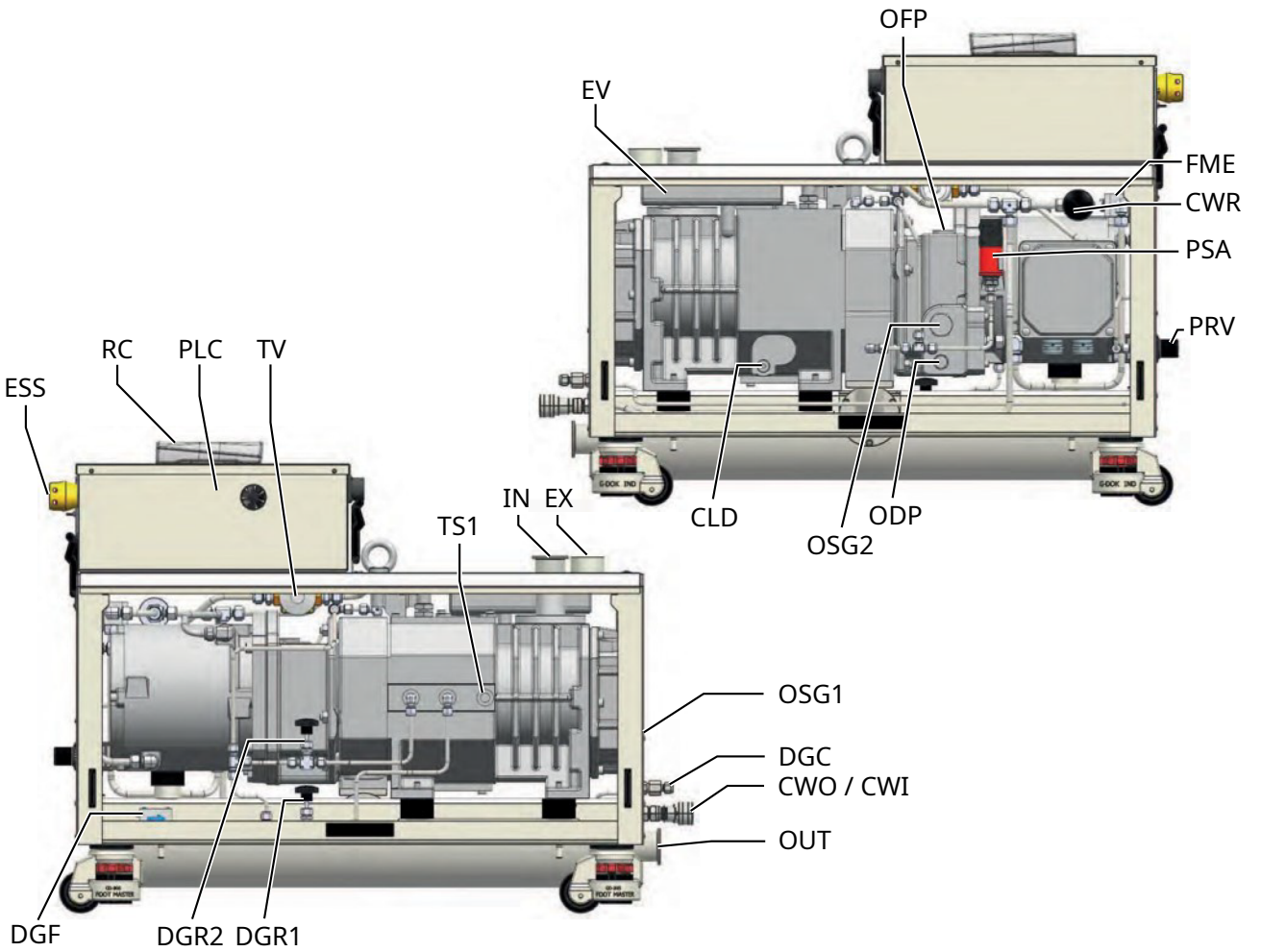

Description			
IN	Inlet connection (Inlet)	OUT	Exhaust connection (Outlet)
ESS	Emergency stop switch	CWO / CWI	Cooling water outlet / inlet connection
CLD	Cooling liquid drain plug	CWR	Cooling water regulating valve
DGC	Dilution gas connection	DGF	Dilution gas flow meter
DGR1	Regulating valve, dilution gas (middle of cylinder)	DGR2	Regulating valve, dilution gas (end of cylinder)
EX	Ventilating duct	EV	Expansion vessel
FME	Flow meter, nitrogen	ODP	Oil drain plug
OFP	Oil fill plug	OSG1	Oil sight glass
OSG2	Oil sight glass	PLC	PLC box
PRV	Pressure regulating valve	RC	Remote control
PSA	Pressure sensor	TS1	Temperature sensor PT100
TV	Thermostatic valve		

COBRA DS 0700 G

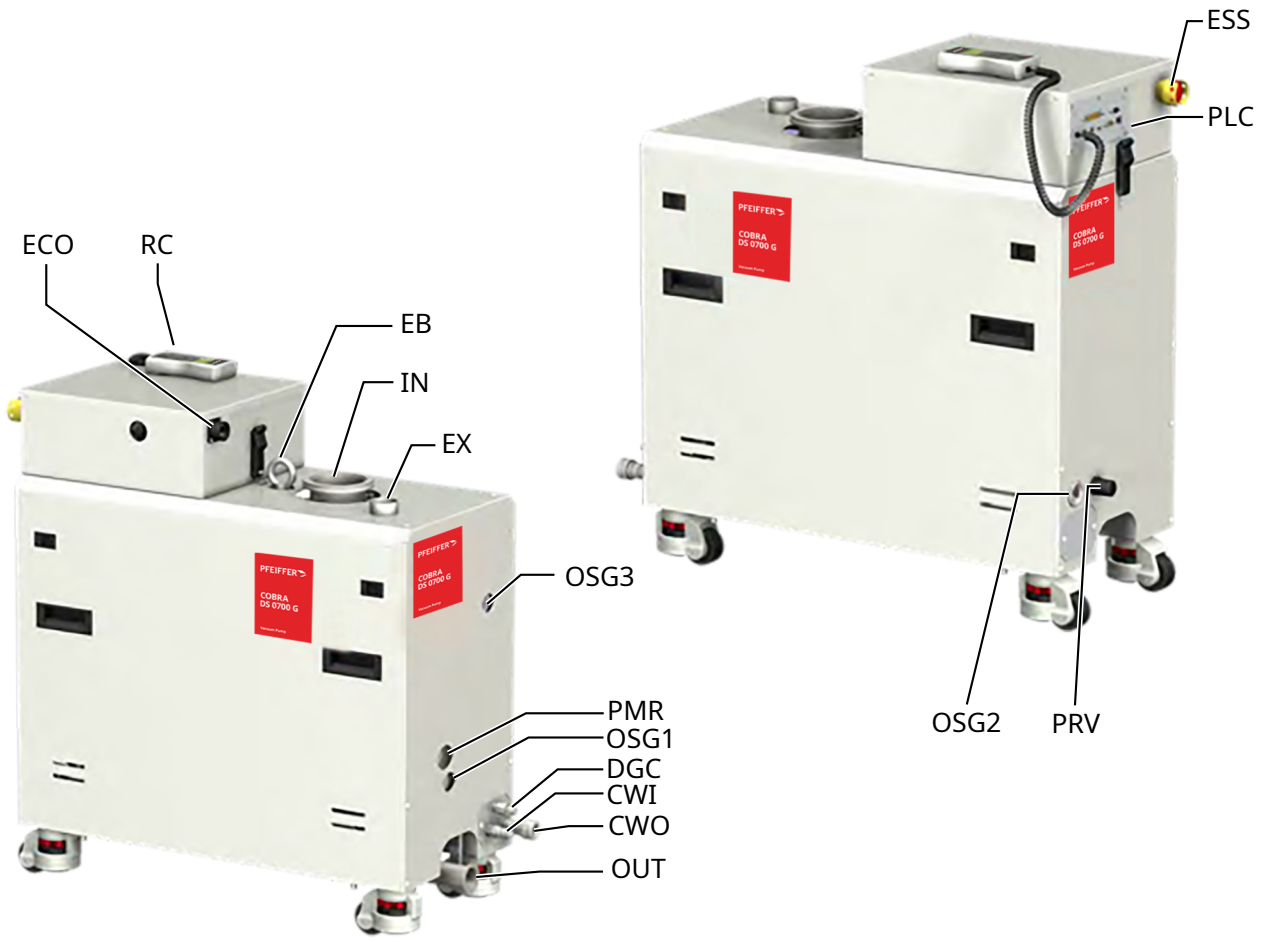

Description			
IN	Inlet connection (Inlet)	OUT	Exhaust connection (Outlet)
CWI	Cooling water inlet connection	CWO	Cooling water outlet connection
DGC	Dilution gas connection	EB	Lifting eyebolt
ECO	Electrical power connection	ESS	Emergency stop switch
EX	Ventilating duct	OSG1	Oil sight glass DP
OSG2	Oil sight glass	OSG3	Oil sight glass MB
PLC	PLC box	PMR	Unblocking for screw
PRV	Pressure regulating valve	RC	Remote control

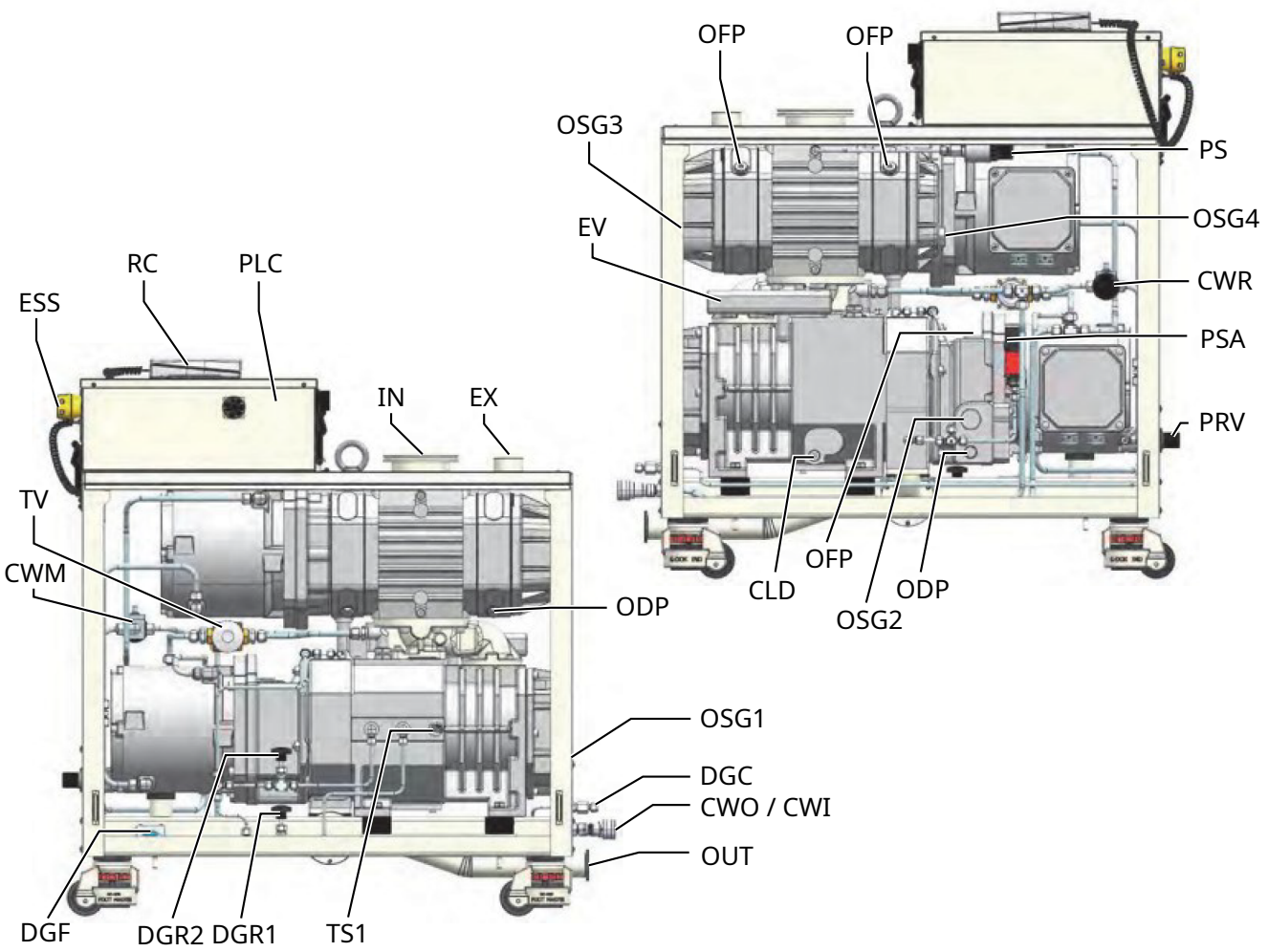

Description			
IN	Inlet connection (Inlet)	OUT	Exhaust connection (Outlet)
CLD	Cooling liquid drain plug	CWO / CWI	Cooling water outlet / inlet connection
CWM	Cooling water flow meter	CWR	Cooling water regulating valve
DGC	Dilution gas connection	DGF	Dilution gas flow meter
DGR1	Regulating valve, dilution gas (middle of cylinder)	DGR2	Regulating valve, dilution gas (end of cylinder)
ESS	Emergency stop switch	EV	Expansion vessel
EX	Ventilating duct	ODP	Oil drain plug DP
ODP	Oil drain plug MB	OFP	Oil fill plug MB
OFP	Oil fill plug MB	OFP	Oil fill plug DP
OSG1	Oil sight glass DP	OSG2	Oil sight glass DP
OSG3	Oil sight glass MB	OSG4	Oil sight glass MB
PLC	PLC box	PSA	Pressure sensor
PS	Pressure switch at MB inlet	PRV	Pressure regulating valve
RC	Remote control	TS1	Temperature sensor PT100
TV	Thermostatic valve		

COBRA DS 1000 / 2000 G

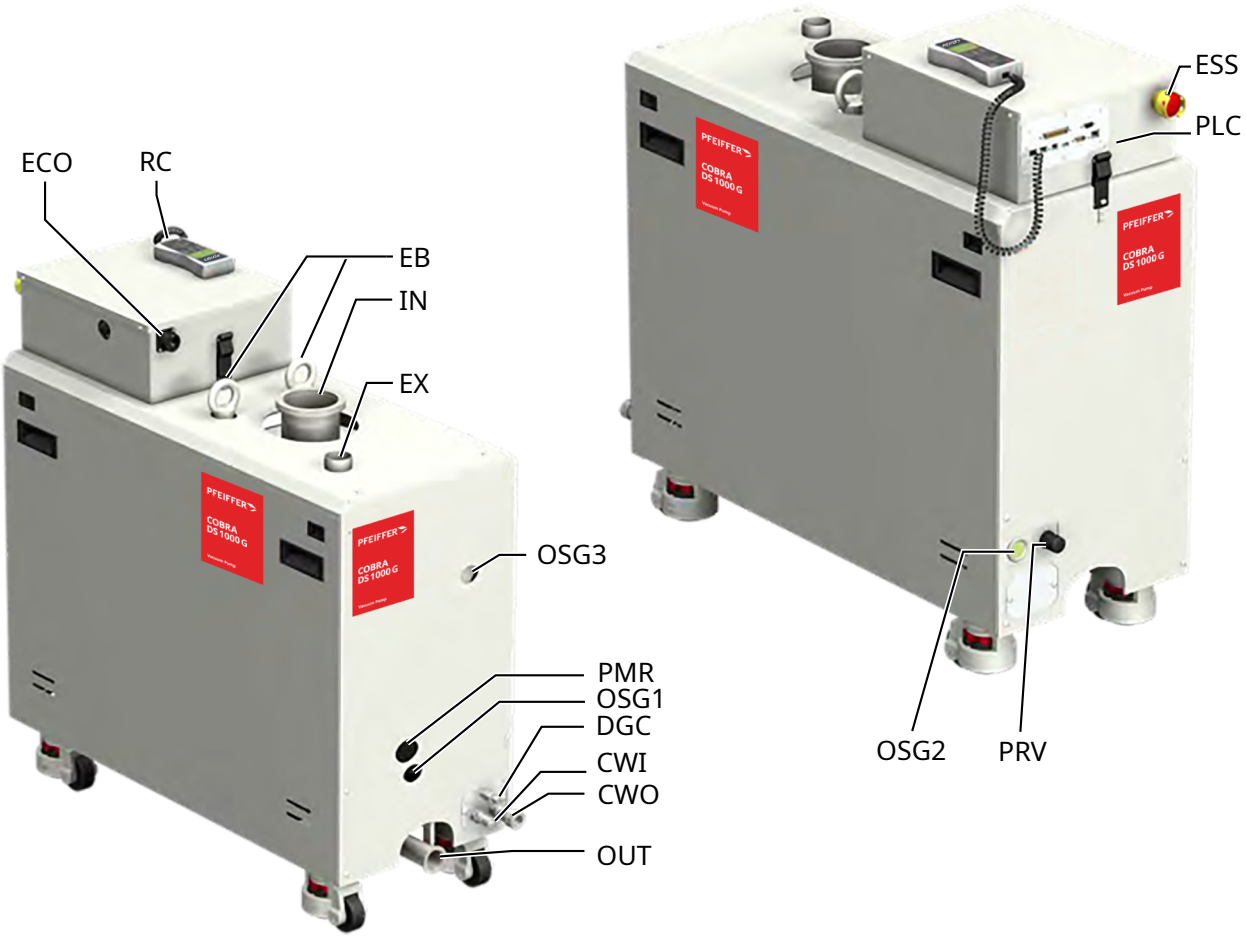

Description			
IN	Inlet connection (Inlet)	OUT	Exhaust connection (Outlet)
CWI	Cooling water inlet connection	CWO	Cooling water outlet connection
DGC	Dilution gas connection	EB	Lifting eyebolt
ECO	Electrical power connection	ESS	Emergency stop switch
EX	Ventilating duct	OSG1	Oil sight glass DP
OSG2	Oil sight glass	OSG3	Oil sight glass MB
PLC	PLC box	RC	Remote control
PMR	Unblocking for screw	PRV	Pressure regulating valve

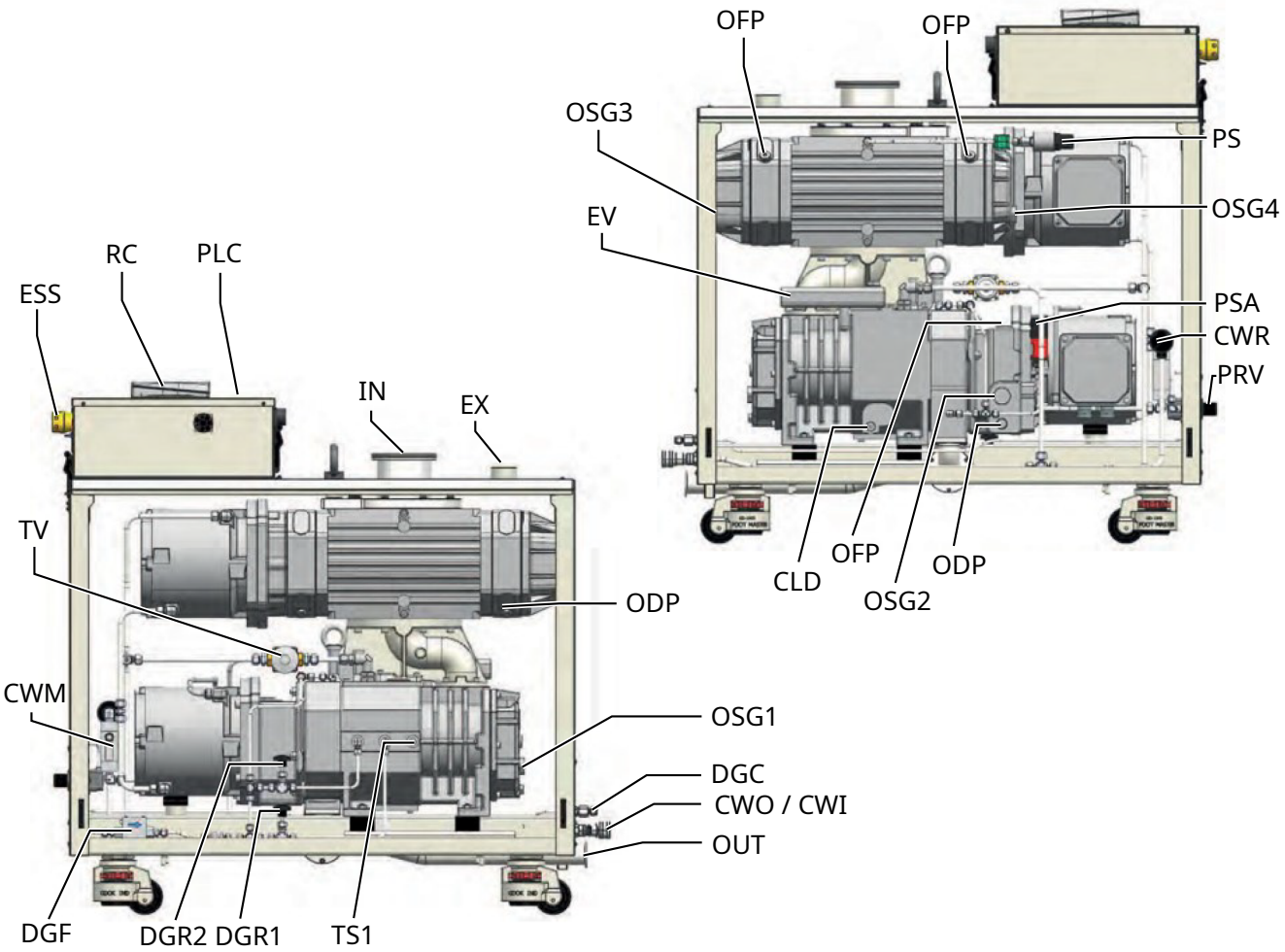

Description			
IN	Inlet connection (Inlet)	OUT	Exhaust connection (Outlet)
CLD	Cooling liquid drain plug	CWO / CWI	Cooling water outlet / inlet connection
CWM	Cooling water flow meter	CWR	Cooling water regulating valve
DGC	Dilution gas connection	DGF	Dilution gas flow meter
DGR1	Regulating valve, dilution gas (middle of cylinder)	DGR2	Regulating valve, dilution gas (end of cylinder)
ESS	Emergency stop switch	EV	Expansion vessel
EX	Ventilating duct	ODP	Oil drain plug DP
ODP	Oil drain plug MB	OFP	Oil fill plug DP
OFP	Oil fill plug MB	OFP	Oil fill plug MB
OSG1	Oil sight glass DP	OSG2	Oil sight glass DP
OSG3	Oil sight glass MB	OSG4	Oil sight glass MB
PLC	PLC box	PRV	Pressure regulating valve
PSA	Pressure sensor	PS	Pressure switch at MB inlet
RC	Remote control	TS1	Temperature sensor PT100
TV	Thermostatic valve		

Process Gas Diagram

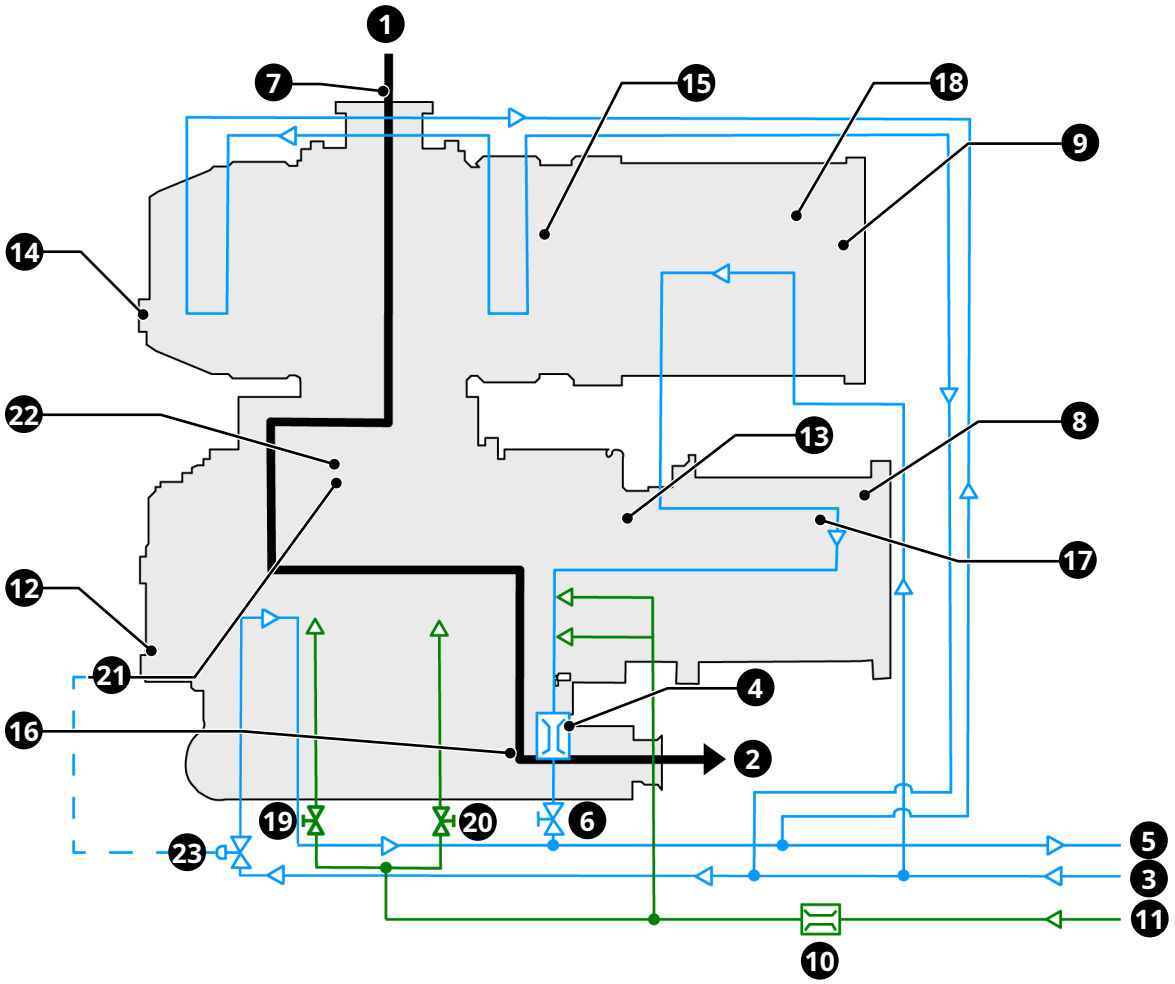

Description			
1	Process gas inlet (PGI)	2	Process gas outlet (PGO)
3	Cooling water inlet (CWI)	4	Cooling water flow meter (CWM)
5	Cooling water outlet (CWO)	6	Cooling water regulating valve (CWR)
7	Inlet pressure switch (PS)	8	Motor DP (MOT 1)
9	Motor MB (MOT 2)	10	Nitrogen flow meter, dilution gas (DGF)
11	Nitrogen supply (NC)	12	Oil sight glass DP (OSG 1)
13	Oil sight glass DP (OSG 2)	14	Oil sight glass MB (OSG 3)
15	Oil sight glass MB (OSG 4)	16	Outlet pressure regulatorr (PRV)
17	Power sensor DP (MPS 1)	18	Power sensor MB (MPS 2)
19	Regulating valve, dilution gas DP (middle of cylinder) (DGR 1)	20	Regulating valve, dilution gas DP (at exhaust) (DGR 2)
21	Temperature sensor for thermostatic valve (TS 2)	22	Temperature sensor (TS 1)
23	Thermostatic valve (TV)		

COBRA NS 0070 C

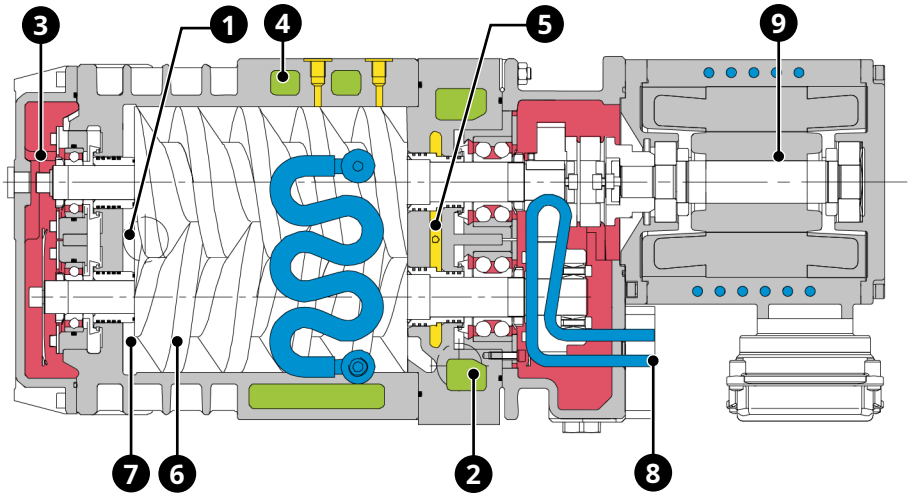

Description			
1	Inlet	2	Outlet
3	Oil	4	Cooling liquid
5	Barrier gas	6	Screw rotors
7	Intake medium	8	Cooling water
9	Motor klixon		

Booster WY 2000 C

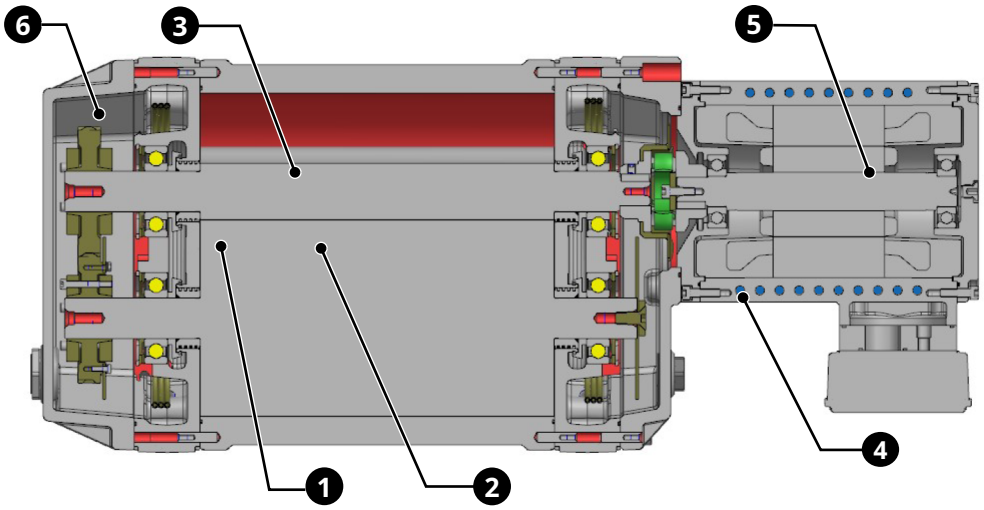

Description			
1	Inlet	2	Outlet
3	Booster lobe	4	Cooling water
5	Motor klixon	6	Oil

2.1 Use

The COBRA DS vacuum pumps are designed for use in the field of microelectronics and similar industries.

They can be used to draw gases and gas mixtures.

WARNING

When using toxic, inflammable and/or explosive gases, make sure that the system corresponds in design to applicable local and national safety regulations and that all applicable safety measures are followed.

All product-specific safety regulations must be observed.

Solid particles must not get into the vacuum pump. Procedural errors can result in the vacuum pump drawing in a certain quantity of liquid. If the vacuum pump has drawn in liquid, a short drying time is necessary at the end of the procedure.

The allowed maximum inlet gas temperature depends on the inlet pressure and the type of gas: the lower the inlet pressure (Pa), the higher the drawn gas temperature (TGas) can be.

The following indicative values for air can be considered:

- Pa > 50 mbar, TGas < 80°C
- Pa < 50 mbar, TGas < 200°C

The vacuum pump is intended for use in a potentially non-explosive environment.

- Make sure that the maximum permissible number of starts does not exceed 2 starts per hour. Those starts should be spread within the hour.

The vacuum pump is thermally suitable for continuous operation at any pressure between atmospheric pressure and ultimate pressure.

The vacuum pump is tight down to ultimate pressure.

2.2 Operating Principle

2.2.1 COMBI

The COBRA DS 0080-2000 G vacuum pumps are a combination of a screw vacuum pump NS 0070 / 0160 C (DP) and a Booster vacuum pump WY 2000 C (MB). The COMBI vacuum pumps are streamlined.

The COBRA DS vacuum pumps are COBRA NS screw vacuum pumps with cooling water and nitrogen circuits.

The COBRA NS screw vacuum pumps are driven by water-cooled motors.

2.2.1.1 Principle of DP Vacuum Pumps

The COBRA NS screw vacuum pumps work by the principle of spiral pumps. Two parallel screws rotate in opposite directions in the pump body. Entering gases are trapped between the flights of the screws and the pump body. The gases are conveyed by the rotation of the screws to the exhaust, where they are discharged.

2.2.1.2 Principle of MB Vacuum Pumps

The Booster vacuum pumps operate according to the approved principle of the Booster type machine. Operation is both simple and effective. Two lobes with identical profiles rotate in opposition directions within a casing. As they rotate, gas is drawn into the space between each lobe and the casing where it is trapped and by the rotation pushed out to the exhaust. This action is repeated twice for each revolution of each lobe and therefore four times for each revolution of the drive shaft. There is no mechanical contact between lobes and cylinder. So no oil lubrication is required.

The drive motor of Booster vacuum pump is a water-cooled canned motor.

2.2.2 Gas Flow Checks

A pressure switch PS at the inlet flange (except for DS 0080, 0160, 1000, 2000 G) monitors the inlet pressure. The MB booster will start when the pressure reaches 15 mbar (for DS 0700 G) and 10 mbar (for DS 1000, 2000 G). If the pressure does not go down, the DP vacuum pump stops.

A pressure sensor PRV at the exhaust monitors the discharge pressure. If the pressure reaches more than the limit value (preset at the factory: 0.2 bar), the purge cycle starts.

2.3 Oil Circuit

Since the complete operating principle works without contact, no oil circuit is needed in the work area.

2.4 Cooling

The vacuum pump is cooled by:

- the filling of cooling water inside the water chambers of cylinder. The flow of the cooling water is controlled by a thermostatic valve TV with a temperature sensor TS2. The adjustment of the valve varies the operating temperature between approximately 50°C (minimum) and 90°C (maximum) and must be set to suit your operating conditions.
  We recommend using a high valve setting to prevent resublimation in the vacuum pump.
- a direct cooling water circuit in the motors and the DP transmission casing. The flow regulating valve CWR of cooling water is preset on 2 l/min at factory. The water cools in the DP and MB pumps motors and the drive/ pump transmission DP system.
- a direct cooling water circuit in the rear bearing (for exceptionally cool running in option).

NOTE

The COBRA DS vacuum pumps are principally dispatched with oil (injected according to customer's order) and cooling liquid already in the vacuum pump but, without cooling water. Before vacuum pump first startup, control the oil level and the cooling liquid level. In the event of absence of one or the other of these lubricants, carry out the filling (refer to the various chapters of filling). Do not forget to connect the cooling water supply before the first startup. Operation without these coolants can result in damage to the vacuum pump.

2.5 Nitrogen System

The nitrogen system can be used in a number of different ways:

- Nitrogen is used as dilution gas. It is injected inside the cylinder on two different places. Nitrogen flow injected in the middle hole is preset at 2 l/min and can be adjusted with valve DGR 1, depending on the application. Nitrogen flow injected in the hole on cylinder end plate side is preset at 10 l/min and can be adjusted with valve DGR 2, depending on the application. When flow is too low a warning then an alarm signal is generated by flow meter FME to the PLC. Status of the pump depends on the alarm function set by user (factory setting: None, pump continues running with an alarm). Dilution improves the screws functioning, especially when drawing corrosive gases.
- Nitrogen is used as purge gas. The purge eliminates traces of gases remaining in the vacuum pump. The vacuum pump purge cycle is programmed in the control and starts, either after a STOP operation or after an alarm function. For a correct purge execution, the shut-off valve at the inlet flange must be closed. The purge cycle lasts about 30 min. (Programmable time in the basic parameters).
- Nitrogen is used as sealing gas. The nitrogen is injected between the transmission and the process gas to achieve good closeness.

2.6 Optional Functions / Use of Available Accessories

The relief valve (SV) prevents excessively high pressure in the expansion tank (EV), relief pressure: 6 bar.

A pressure switch with normally closed contact mounted in the expansion tank monitors the pressure of the cooling liquid. It must be connected in such a way that actuation causes the vacuum pump to be switched off when the pressure exceeds a value of 3 bar.

A temperature sensor PT100 (TS 2) mounted on the cylinder, measures the temperature inside the cylinder (DP).

A silencer or sound absorber (accessory) at the exhaust reduces the noise of the vacuum pump and collects any condensate.

A leak-protection non-return valve (optional) at the exhaust traps the condensate in the vacuum pump when the vacuum pump is switched off.

The LCD controller processes the data of the sensors as follows:

- PRV: overpressure sensor
- OSG1 and OSG2: DP oil level (option)
- TS 1: temperature in the cylinder DP
- MPS1 : DP current, rotation speed and MPS2: MB current, rotation speed
- DGF: nitrogen flow
- CWM: cooling water flow rate in motors/ transmission

See "Installation and Maintenance Instructions, PLC and LCD (No. 0870758077 / -0002)".

2.7 On / Off Switch

The vacuum pump is delivered with a circuit breaker. The function start / stop can be done in Local by using the LCD controller or in Remote by the production machine.

2.8 Versions

Further vacuum pump descriptions state the nominal displacement and the design level.

Example: DS 1000 G
DS = standard version
1000 = 960 m^3/h
G = Design

3 Safety

3.1 Intended Use

DEFINITION: To rule out any misunderstanding, the term “handling” of the vacuum pump covers transport, storage, installation, and operation of the pump as well as effects on operating states and troubleshooting on the vacuum pump.

The vacuum pump is intended for industrial use. It may only be operated by qualified personnel.

The different application possibilities and limit values for operation described in “Product description” and “Installation requirements” must be observed by the manufacturer of the system into which the vacuum pump is to be integrated and by users.

The need for personal safety regulations depends in principle on the type of use. The operator must provide the users with the necessary means and must inform his personnel about the dangers emanating from the processed product.

The operator of the vacuum pump must observe the safety regulations and must train and instruct his personnel accordingly.

Local regulations regarding the motors and electric control elements must be observed when installing the pump in potentially explosive environments.

The maintenance instructions must be followed and observed.

These installation and maintenance instructions must be read and understood before the vacuum pump is used. If you have any doubts, contact your manufacturer representative.

3.2 Safety Information

The vacuum pump is designed and manufactured in compliance with the latest technical standards and safety regulations. Nevertheless, an element of residual risk remains.

This instruction manual highlights potential hazards where appropriate. Safety notes and warning messages are tagged with one of the keywords DANGER, WARNING, CAUTION, NOTICE and NOTE as follows:

DANGER

... indicates an imminent dangerous situation that will result in death or serious injuries if not prevented.

WARNING

... indicates a potentially dangerous situation that could result in death or serious injuries.

CAUTION

... indicates a potentially dangerous situation that could result in minor injuries.

NOTICE

... indicates a potentially dangerous situation that could result in damage to property.

NOTE

... indicates helpful tips and recommendations, as well as information for efficient and trouble-free operation.

CAUTION

The COBRA DS system includes provision for the secondary containment of liquids leaks such as water and oil.

3.3 Safety Stickers

COBRA NS 0070 C

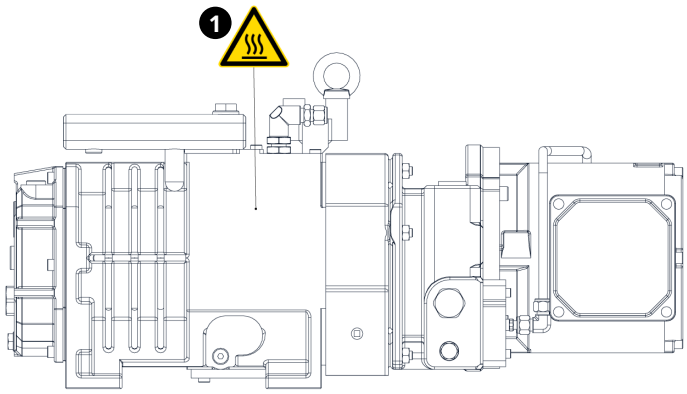

Description			
1	Warning! Hot surface! Do not touch!		

PUMA WY 2000 C

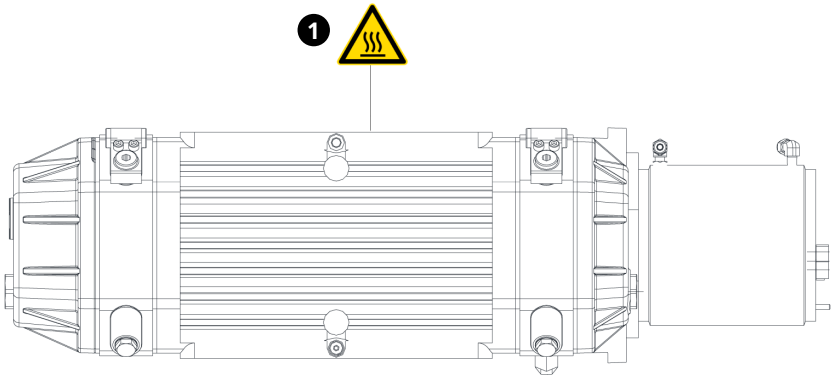

Description			
1	Warning! Hot surface! Do not touch!		

3.4 Sound Pressure Emission

Refer to the table “Technical data” for the permissible sound levelling free field conditions according to EN ISO 2151.

CAUTION



The sound level of the vacuum pump within a certain perimeter of the vacuum pump is high.

Risk of hearing damage.

Users who are spending a longer period in the vicinity of a non-insulated vacuum pump must wear suitable ear protection.

3.5 Safety Area

Before any maintenance action, ensure a safety perimeter of a least 610 [mm] around the vacuum pump.

3.6 Seismic Zone Installation

Upon receipt, the vacuum pump is fixed on the transport pallet with two brackets.

- Convey the vacuum pump to its final location with a pallet truck before removing it from its support.
- Unscrew the fixing screws of the vacuum pump on the transport pallet and remove the machine from its support with an appropriate lifting system by using the lifting brackets made for this purpose.
- The vacuum pump must not lay only on the brackets. Unscrew the four adjusting nuts until the machine legs touch the ground.
- Check that the wheels no longer touch the ground.

CAUTION

The vacuum pump is fixed to the ground with four M10 screws, two screws per bracket. The fixing screw must stand a 1200 N tensible force (per bracket).

The final user must adapt the type of screws depending on the ground material.

3.7 Information over Lubricants

3.7.1 Oil

Oil filling	MB pump motor side (A – liters)	MB pump gear side (B – liters)	DP pump motor side (A – liters)	DP pump gear side (B – liters)
DS 0080 G	-	-	1.2	0.5
DS 0160 G	-	-	1.2	0.5
DS 0700 G	0.6	0.8	1.2	0.5
DS 1000 G	0.6	0.8	1.2	0.5
DS 2000 G	1.2	1.5	1.2	0.5
Oil type	YLC 250 B, Art. No. 0831 131 400 (0,5 l ≈ 1 kg)			

- Replacement: After 5000 h (see "*Maintenance Schedule* [➔ 42]").

3.7.2 Cooling Liquid

Cooling liquid filling	NS 0070 / 0160 C
Cooling liquid quantity (Liter)	4 liters
Cooling liquid type	Glycol (Ethylene), Art. No. 2000 241 757, CLA 25 (already mixed ready-to-use)

- Replacement: After 5000 h (see "*Maintenance* [➔ 41]").

3.8 Decommissioning Procedure

When the product arrives at the end of the lifetime, it is necessary to proceed to the decontamination of the vacuum pump.

CAUTION

Only authorized personnel may carry out any dismantling on the vacuum pump. Before work begins, the operator of the vacuum pump must fill in a form or a "Declaration Regarding Contamination of Vacuum Equipment and Components" that provides information on possible dangers and appropriate measures.

If this form has not been filled in completely and signed by a responsible person, the vacuum pump may not be dismantled.

- Proceed to disassembly of the vacuum pump. Make sure to wear a personal protective equipment (PPE) prior to any intervention on the vacuum pump. Some residues may remain inside.
- Proceed to decommissioning of the different parts according to the current local and national laws.

4 Transport

The COBRA DS vacuum pumps are tested and checked in our factory before careful packing. Check the packaging for transport damage when the goods arrive. The vacuum pump can withstand temperatures between -25°C and +55°C during transport.

4.1 Transport in Packed State

Packed on a pallet, the vacuum pump can be moved with a hand forklift truck.

4.2 Transport in Unpacked State

The vacuum pump is fastened to the pallet with fixing pins:

- Unscrew the fastening nuts underneath the pallet.



CAUTION

Do not work, walk, or stand under suspended loads.



CAUTION

Check out the weight of the vacuum pump before lifting it up (see "Technical Data").

Use adequate lifting gear for this.

NOTE

The eyebolts are fitted more or less at equal distance from the center of gravity of the vacuum pump incl. drive motor. If any accessories that could upset the balance of the vacuum pump, are installed, or if the vacuum pump is delivered without drive motor, it is necessary to add a belt or rope at a suitable point when lifting the vacuum pump.

- Attach lifting gear securely to the eyebolt or eyebolts.
- Use lifting gear with a crane hook equipped with safety latch.
- Lift the vacuum pump.



In case the vacuum pump was bolted to a pallet with fixing bolts:

- Unscrew the fixing bolts in the base frame.

CAUTION

In case of a vacuum pump filled with oil, make sure that by lifting the inclination angle of the vacuum pump do not exceed 5° from the horizontal. In case of too high inclination (>5°), risk of oil leak within the work area.

- Make sure before every transport using the appropriate lifting mean that the inclination of the vacuum pump is less than 5°.

The packaging material must be disposed of in accordance with local and national regulations.

This handbook is contained in the delivery package.

5 Storage

5.1 Temporary Storage

- Make sure that the inlet and exhaust flanges are closed (put on the protective caps included in the delivery package of the vacuum pump)
- Store the vacuum pump:
  - if possible, the vacuum pump should be stored in its original packaging,
  - indoors,
  - dry,
  - in a dust-free and vibration-free room.

5.2 Vacuum Pump Removal

Before starting a vacuum pump that has been stored outside the building for a while, the vacuum pump must be moved to a room with ambient temperature, where it should rest for a day.

5.3 Preservation

If the vacuum pump will be exposed to unfavorable ambient conditions (for example, aggressive environment, frequent temperature changes), begin immediately with preservation work on the vacuum pump.

In the case of favorable ambient conditions, perform preservation work on the vacuum pump if a storage period of more than three months is planned.

- Make sure that all openings are hermetically sealed; use adhesive tape to fasten loose parts (seal rings, flat seals, etc.).



NOTE

VCI is the abbreviation for “volatile corrosion inhibitor”. The VCI molecule is an organic corrosion inhibitor in the vapor phase. Integrated in various carriers such as film, cardboard, paper, foam, liquid and powder, it protects the parts against corrosion because of its action in the vapor phase. However, VCI packaging can attack synthetic surfaces and surfaces of other elastomers. If in doubt, contact your nearest distributor. VCI packaging provides several years of protection against corrosion, even under the harshest of conditions: overseas shipment, extended storage before use.

- Wrap the vacuum pump in a VCI film.
- Store the vacuum pump:
  - if possible, the vacuum pump should be stored in its original packaging,
  - indoors,
  - dry,
  - in a dust-free and
  - vibration-free room.

5.3.1 Vacuum Pump Start-up after Storage

- Make sure that all protective elements, stoppers, or adhesive tapes attached before preservation have been removed.
- Switch on the vacuum pump in the sequence described in “*Installation and Commissioning* [➔ 23]”.

6 Installation and Commissioning

6.1 Installation Prerequisites

CAUTION

In case of non-compliance with the installation prerequisites, particularly in case of insufficient cooling:

Risk of damage or destruction of the vacuum pump vacuum pump and its components!

Risk of personal injury!

The installation prerequisites must be complied with.

- Ensure that the integration of the vacuum pump is compliant with the safety requirements of the Machine Directive 2006/42/EC (concerning the responsibility of the system's manufacturer into which the vacuum pump is to be incorporated, also refer to the note in the EU-Declaration of Conformity).

WARNING

Local regulations regarding the motors and electric control elements must be observed when installing the vacuum pump in potentially explosive environments.

Make sure before start-up that all safety measures have been followed.

6.1.1 Local Installation

- Make sure that the environment of the vacuum pump is not potentially explosive.
- Make sure that the following ambient conditions are fulfilled:

Ambient conditions	Requirements
Ambient temperature	0 ... 40 °C (32 ... 104 °F).
Ambient pressure	Atmosphere
Humidity range	20 to 95%
Altitude	Up to 1000 m

- Make sure that the cooling water fulfills the following requirements:

Hardness	dGH	< 5 °
Temperature	°C	10 - 25
Overpressure	bar (relative)	2 - 5
Approximate flow rate for the standard version	l/ min	7 - 8
Approximate flow rate for other applications	l/ min	7 -15
Properties	Clean & clear	
Particle size	µm	< 200
Chloride	mg/l	< 100
Electrical conductivity	µS/cm	≤ 100

Free chloride	mg/l	< 0.3

NOTE

1° (german degree = 1° dGH) = 1,78° (french degree) = 1,25 e (english degree) = 17,9 mg/kg Ca-CO3 (american hardness).

- Make sure that the cooling water is neutral and clean.
- Make sure that the cooling water outlet is unpressurised.
- Make sure that the nitrogen fulfills the following requirements:

Nitrogen overpressure	bar	1.5
Approximate flow rate	l/min	0 - 75 l/min

- Make sure that the ambient conditions correspond to the protection class of the motor (according to name plate).
- Make sure that the vacuum pump is placed on or fastened to a horizontal surface.
- Make sure that the vacuum pump is level.

NOTE

The pump levelling is facilitated by the adjustment stroke (~30 mm) of the four machine foots.

- Make sure that the four rollers do not touch the ground.

NOTE

In order to ensure the pump fixation to the ground, it is possible to use again the four yellow brackets that were removed at the machine reception.

- Make sure that the vacuum pump is at least 1 m away from any wall to ensure good cooling.
- Make sure that the vacuum pump is easily accessible and that the selected installation site fulfills the requirements for assembly / dismantling.
- Make sure that no temperature-sensitive parts (for example, of plastic, wood, cardboard, paper, electronic parts) come into contact with the hot surfaces of the vacuum pump.
- Make sure that the installation site or assembly area is ventilated in such a way that adequate cooling of the vacuum pump is ensured.



CAUTION

The surface temperature of the vacuum pump can exceed 50°C when the vacuum pump is in operation.

Danger of burns!

- Make sure that no-one can touch the vacuum pump accidentally. If necessary, attach safeguard.
- Make sure that the oil sight glasses (OSG) are easily accessible.

If oil changes are to be made on site:

- Make sure that the oil drain and oil filler are easily accessible.

6.1.2 Inlet Connection

- Make sure that the protection that was attached to prevent penetration of particles during transport has been removed before the vacuum pump is connected to the vacuum line

CAUTION

Do not put hands into the inlet aperture!

Risk of body damage!

CAUTION

The inlet of liquids or solid particles can lead to the destruction of the vacuum pump.

If the drawn gas contains dusts or solid foreign bodies:

- Make sure that a filter or protective grating is installed at the extraction point.
- Make sure that the nominal diameter of the inlet line is at least equal to the diameter of the inlet flange of the vacuum pump to prevent a drop in the performance of the vacuum pump in the case of a smaller cross-section
- Make sure that the vacuum pump is connected with leakproof lines.

CAUTION

When the inlet lines have been connected, make sure that the system does not leak.

Leakages of dangerous substances must be prevented!

- Make sure that the inlet lines are equipped with a shut-off device upstream of the inlet flange so that the flow of drawn gas can be stopped.
- Make sure that the inlet lines do not exercise any force on the inlet flange. Mount bellows if necessary.
- The inlet flange has the following dimension:

Pump type	Inlet Connection Dimensions
DS 0080 G	DN 40 ISO KF
DS 0160 G	DN 50 ISO KF
DS 0700 G	DN 63 ISO KF
DS 1000 G	DN 100 ISO KF
DS 2000 G	DN 160 ISO KF

In the case of long inlet lines, the line cross-section should be larger than the inlet flange to prevent a drop in the performance of the vacuum pump. If you have any doubts, contact your manufacturer representative.

6.1.3 Exhaust Connection

- Make sure that the protection that was attached to prevent penetration of particles during transport has been removed before the vacuum pump is connected to the vacuum line

CAUTION

Do not put hands into the outlet aperture!

Risk of body damage!

The following instructions for connection to the exhaust only apply if the drawn gas is discharged by the vacuum pump into a suitable environment.

- Make sure that the protection that was attached to prevent penetration of particles during transport has been removed before the vacuum pumpis connected to the vacuum line.
- Make sure that the nominal diameter of the exhaust line is at least equal to the diameter of the exhaust flange of the vacuum pump to prevent a drop in the performance of the vacuum pump in the case of a smaller cross-section
- Make sure that the vacuum pump is connected with leakproof lines.

CAUTION

When the exhaust lines have been connected, make sure that the system does not leak.

Leakages of dangerous substances must be prevented!

- Make sure that the exhaust line is mounted in such a way that condensate cannot penetrate into the vacuum pump (siphon trap, gradient).
- Make sure that no shut-off devices are mounted in the exhaust line.
- Make sure that the exhaust lines do not exercise any force on the exhaust flange. Mount bellows if necessary.
- The exhaust flange has the following dimension:

– DN 40 ISO-KF

In the case of long exhaust lines, the line cross-section should be larger than the exhaust flange to prevent a drop in the performance of the vacuum pump. If you have any doubts, contact your manufacturer representative.

6.1.4 Cooling Water Connection

The cooling water is generally connected with a hose (leakproof against oxygen).
The cooling water outlet must be unpressurised.

Connection diameter	3/8 NPT

6.1.5 Nitrogen Connection

The nitrogen is connected with a pipe (leakproof against oxygen).

Connection diameter	1/4 NPT

6.1.6 Electrical Connection/ Checks

- Make sure that the regulations of the Electromagnetic Compatibility Directive 2014/30/EU as well as standard EN norms, safety directives and especially local and national regulations are observed, (this is the responsibility of the manufacturer of the system into which the vacuum pump is integrated according to the EU-Declaration of Conformity).
- Make sure that the main power supply corresponds to the data on the name plate of the motor.
- Make sure that an overload cut-out according to EN 60204-1 is provided for the motor.
- Make sure that the drive of the vacuum pump is not disturbed by any electric or electromagnetic interferences. If you have any doubts, contact your manufacturer representative.
- Check permissible primary voltage next to the power connection!
- Connect the supply voltage leads on the main contactor.

6.2 Installation

6.2.1 Mounting

- Make sure that the “Necessary installation instructions” are followed.
- Fasten or install the vacuum pump at its final installation site.

6.2.2 Electrical Connection



WARNING

Risk of electrocution, risk of damage.

Electrical installation must be performed by a suitably qualified electrician who knows and follows the following regulations:

- IEC 364 or CENELEC HD 384 or DIN VDE 0100,
- IEC Report 664 or DIN VDE 0110,
- VBG 4 or corresponding national regulations on accident prevention.

CAUTION

The circuit diagrams described below conform to the standard. Other circuit diagrams might be used. This depends on the particular order and the market.

Risk of damage to the motors!

Check the connection of the motors inside the terminal box according to the circuit diagram.

Motor of screw pump DS is connected at factory.

CAUTION

When connecting up the wires into the terminal box: make sure the tightening torque of 3 Nm is adhered to and check with a calibrated torque wrench (Nuts M6).

Motors of screw vacuum pump DS 0080-2000 G are connected at factory.

Motor connectors:

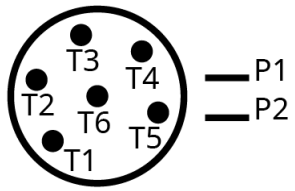

Connection of motor temperature switch (recommended):



Only apply voltages ≤ 250 VAC
Max. current: 1.6 A
MTS = Motor temperature switch (in motor coil)

Delta connection (low voltage):

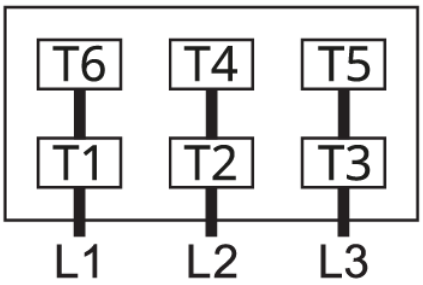

Star connection (high voltage):

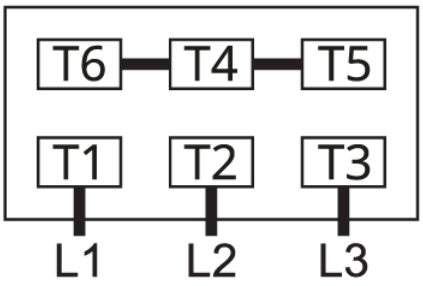

6.2.2.1 Power Wiring Connection

Power wiring 4 poles	
1	Phase L1
2	Phase L2
3	Phase L3
4	Ground

6.2.2.2 Power Connector on Front Side



Description			
1	General power supply		

DDK

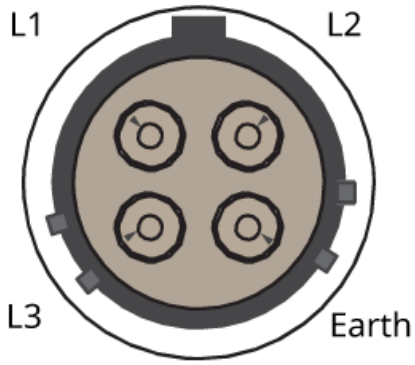

Yeonhab

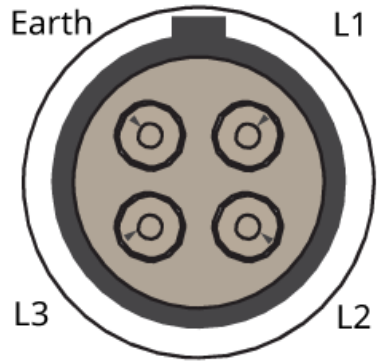

Electrical Data

Model	Frequency	I Rate		IMax		Icu	
		200-240 V	380-460 V	200-240 V	380-460 V	200-240 V	380-460 V
DS 0080 G	50 Hz	17.2 A	11.7 A	25 A	16 A	20 kA	10 kA
	60 Hz	20 A	9.9 A	25 A	16 A	20 kA	10 kA

Model	Frequency	I Rate		IMax		Icu	
DS 0160 G	**50 Hz**	22 A	16 A	32 A	20 A	20 kA	10 kA
	60 Hz	25 A	17 A	32 A	20 A	20 kA	10 kA
DS 0700 G	**50 Hz**	40 A	23.4 A	50 A	32 A	20 kA	10 kA
	60 Hz	34.4 A	19.8 A	50 A	32 A	20 kA	10 kA
DS 1000 G	**50 Hz**	40 A	23.4 A	50 A	32 A	20 kA	10 kA
	60 Hz	34.4 A	19.8 A	50 A	32 A	20 kA	10 kA
DS 2000 G	**50 Hz**	50 A	28.6 A	63 A	40 A	20 kA	10 kA
	60 Hz	54 A	30.8 A	63 A	40 A	20 kA	10 kA

- Protect the vacuum pump with the electrical device according to the rated current of the vacuum pump.

CAUTION

If the vacuum pump is operated with a motor that turns in the wrong direction, it can be destroyed, even if this is the case for only a short moment.

- Make sure that the vacuum pump is connected correctly before switching it on.

- Determine rotation direction of the motor by engineer.
- Press on the start button.
- Make sure that the vacuum pump draws in.
- If not, push the Emergency stop button.

If the direction of rotation must be changed:

- Exchange two of the three feeder leads.

6.2.3 Equipment Connections (with Options)

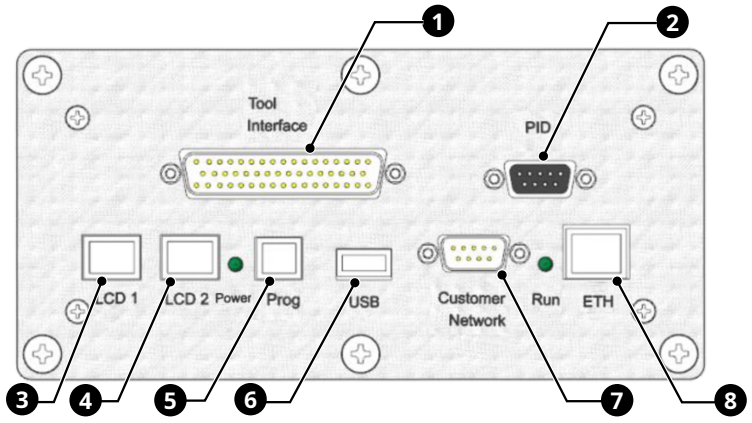

Description			
1	Interface connection (50 poles) (option)	2	PID Interface (option)
3	LCD serial wiring (RJ45), LCD 1	4	LCD serial wiring (RJ45), LCD 2
5	PC serial wiring (9 poles) (option)	6	USB connection
7	Customer Network, Communication modbus RTU RS 232	8	Ethernet network connection (Manufacturer Monitoring System - Option)

The information concerning the use of the manufacturer PLC and LCD (RC) can be found in the Operation and Maintenance manual (Art. No. 0870758077 / -0002).

6.2.4 Lines / Pipes Connection

- Connect the inlet lines.
- Connect the exhaust lines.
- Make sure that all caps, safeguards, and similar covers are mounted.
- Make sure that the inlet and outlet for the cooling air are not covered or closed and that the flow of cooling air is not impaired in any way.

6.2.5 Oil Filling

NOTE

The COBRA DS vacuum pumps are generally dispatched with oil already in the vacuum pump. Before vacuum pump first startup, control the oil level.

In the event of absence of one or the other of these lubricants, carry out the filling (see "*Oil Type/ Quantity* [➔ 60]" for information on the recommended oils).

- Prepare the quantity of oil specified in the table "*Oil Quantity* [➔ 60]".

6.2.5.1 COBRA NS 0070 C Oil Filling

NOTE

The quantity of oil specified in the installation handbook is of informative nature only. Check the oil level with the help of the various oil sight glasses (OSG 1,2,3,4) on the vacuum pump.

CAUTION

Before you change the type of oil, make sure that the new type is compatible with the old type. If necessary, flush the vacuum pump.

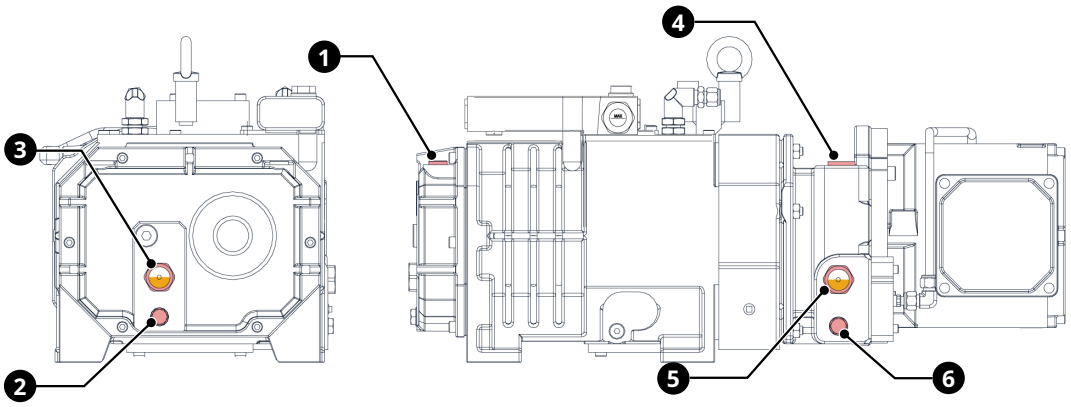

Description			
1	Oil filling plug (OFP)	2	Oil drain plug (ODP)
3	Oil sight glass (OSG)	4	Oil filling plug (OFP)

Description			
5	Oil sight glass (OSG)	6	Oil drain plug (ODP)

- Unscrew the oil filler plugs (OFP).
- Fill up to the upper level of the target circle of the oil sight glasses (OSG). Make sure that the filling level is in the target circle of the oil sight glasses (OSG).

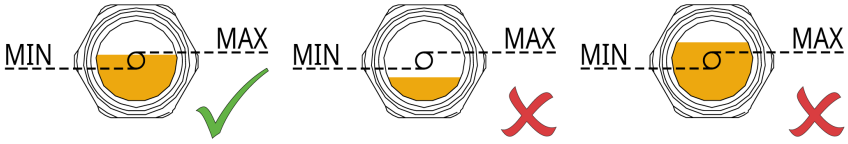

- Make sure that the seal ring in the oil filler plugs is not damaged, replace plugs if necessary. Fit the oil filler plugs and tighten up.

6.2.5.2 PUMA WY 2000 C Oil Filling

NOTE

The quantity of oil specified in the installation handbook is of informative nature only. Check the oil level with the help of the various oil sight glasses (OSG 1,2,3,4) on the vacuum pump.

CAUTION

Before you change the type of oil, make sure that the new type is compatible with the old type. If necessary, flush the vacuum pump.

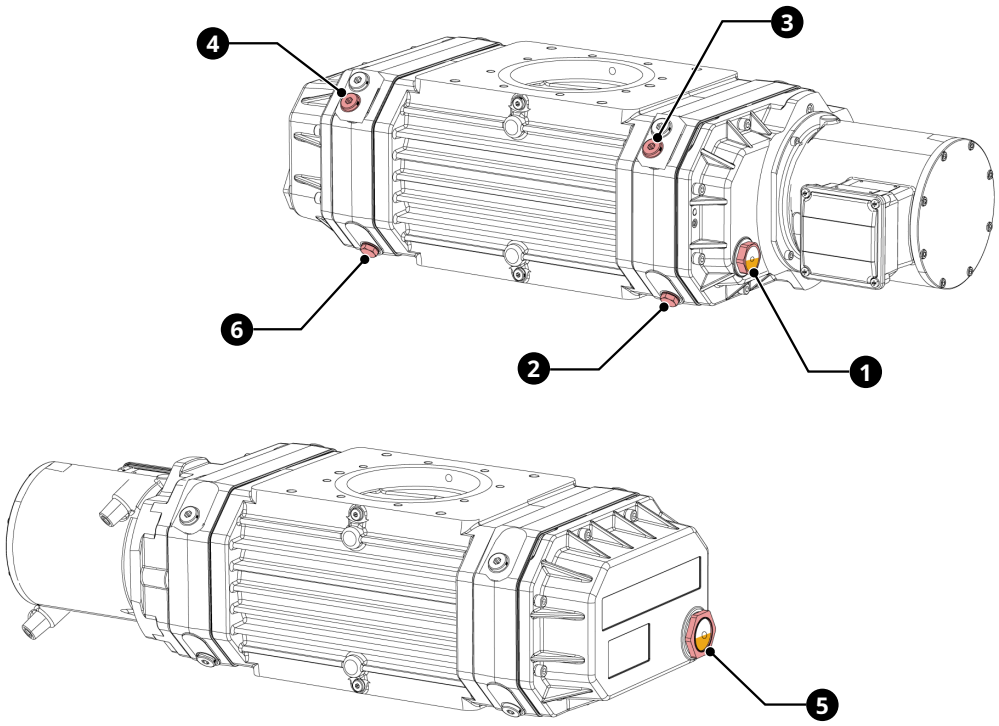

Description			
1	Oil sight glass (OSG)	2	Oil drain plug (ODP)
3	Oil fill plug (OFP)	4	Oil fill plug (OFP)
5	Oil sight glass (OSG)	6	Oil drain plug (ODP)

- Unscrew the oil filler cap (OFP).
- Fill in oil.
- Fill up to the upper level of the target circle on the oil sight glasses (OSG).
- Make sure that the filling level is in the upper level of the target circle on the oil sight glasses (OSG).

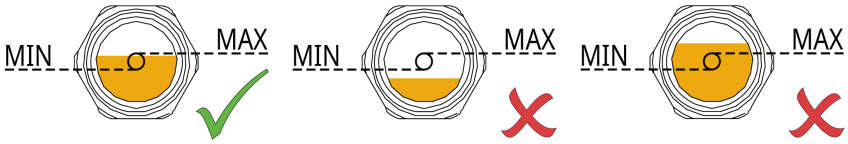

- Make sure that the seals of the oil filler cap are not damaged. Replace them if necessary.
- Screw on the oil filler cap hermetically tight.

NOTE

It is easier to switch on the vacuum pump with cold oil when the inlet line is not closed or when the inlet flange is not covered by a rubber plate.

- Start the vacuum pump.

If the inlet line is equipped with a shut-off device:

- Close the shut-off device.

If the inlet line is not equipped with a shut-off device:

- Place a rubber plate on the inlet flange.
- Let the vacuum pump run for a few minutes.
- Stop the vacuum pump and wait a few minutes.
- Fill up to the upper level of the target circle on the oil sight glasses (OSG). Make sure that the filling level is in the target circle on the oil sight glasses (OSG).

If the oil level is below the target circle (Booster):

- Fill in more oil.

If the inlet line is equipped with a shut-off device:

- Open the shut-off device.

If the inlet line is not equipped with a shut-off device:

- Remove the rubber plate from the inlet flange and connect the inlet line to the inlet flange.

CAUTION

In case of a vacuum pump filled with oil, make sure that by lifting the inclination angle of the vacuum pump do not exceed 5° from the horizontal.

In case of too high inclination (>5°), risk of oil leak within the work area.

- Make sure before every transport using the appropriate lifting mean that the inclination of the vacuum pump is less than 5°.

CAUTION

The vacuum pump must remain in a horizontal position when it has been filled with oil.

6.2.6 Cooling Liquid Filling

CAUTION

Do not run the vacuum pump without cooling liquid!

NOTE

The COBRA DS vacuum pumps are generally dispatched with cooling liquid already in the vacuum pump. Before vacuum pump first startup, control the cooling liquid level. In the event of absence of one or the other of these lubricants, carry out the filling (see "*Cooling Liquid Type/ Quantity* [➔ 61]" for information on the recommended cooling liquids).

- Prepare the quantity of cooling liquid specified in the table "*Cooling Liquid Quantity* [➔ 61]".

Cooling liquid filling	NS 0070 / 0160 C
Cooling liquid quantity (Liter)	4 liters
Cooling liquid type	Glycol (Ethylene), Art. No. 2000 241 757, CLA 25 (already mixed ready-to-use)

6.2.6.1 COBRA NS 0070 C Cooling Liquid Filling

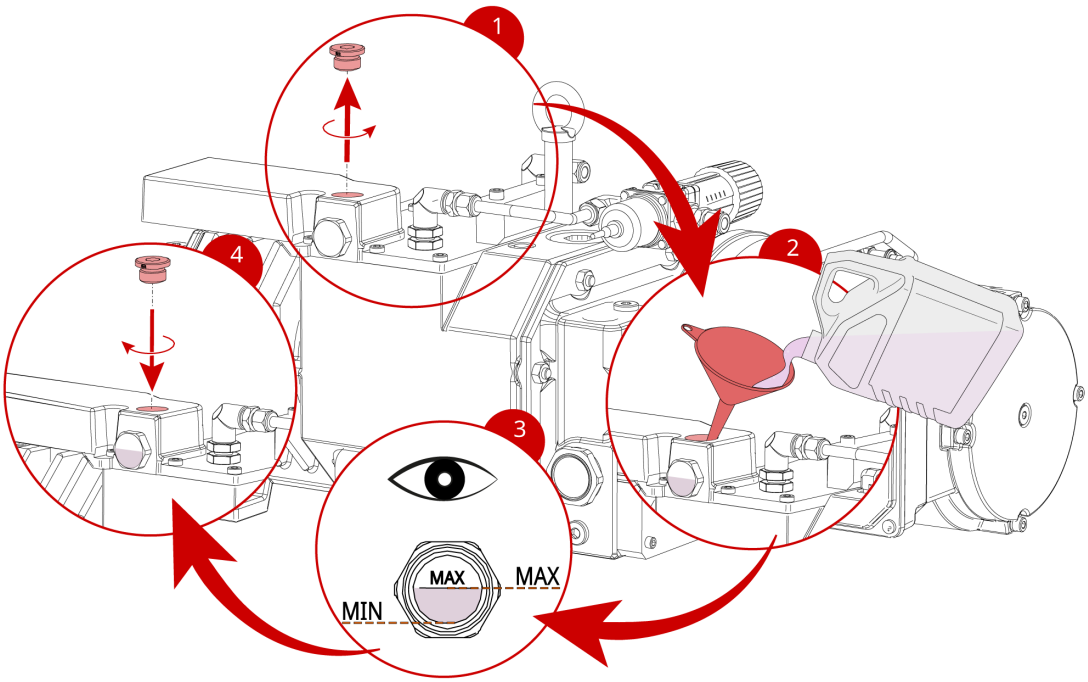

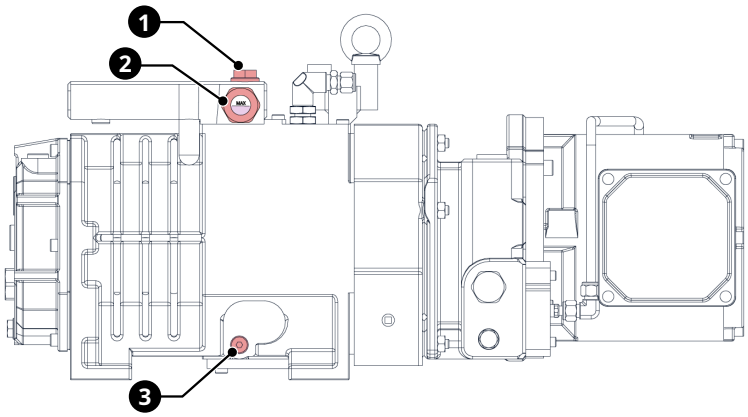

Description			
1	Cooling liquid filling plug (CLF)	2	Cooling liquid sight glass (CLG)
3	Cooling liquid drain plug (CLD)		

- Make sure that the vacuum pump has been switched off and that it cannot be switched on again accidentally.

NOTE

The quantity of cooling liquid specified in the installation handbook is of informative nature only. Respect the procedure of filling the cooling liquid.

- Check the level of the cooling liquid at the cooling liquid level sight glass (CLG) located on the expansion vessel.
- The level of the cooling liquid in the expansion vessel may never exceed the MAX marking on the cooling liquid level sight glass (CLG).
- Unscrew filler cap (CLF) of cooling liquid on the expansion vessel.
- Fill in the cooling liquid through the filler opening until the liquid comes to the MAX marking of the cooling liquid level sight glass (CLG).
- Stop filling in cooling liquid.
- Check the level of the cooling liquid.
- Screw on the filler cap (CLF) for the cooling liquid again.
- If cooling liquid has run on the outside surfaces of the vacuum pump, wipe it off.
- Stop fill in.
- Screw on the cooling liquid filler cap again.
- If liquid has run on to the outside surfaces of the vacuum pump, wipe it off.
- Start the vacuum pump.

6.2.7 Direct Cooling Checking

The flow of the cooling water is checked by the flow meter CWM. The flow meter must be connected in such a way that switching-on leads to a warning at 2 l/min, when the flow drops below 1,5 l/min, the vacuum pump must be stopped.

6.2.8 Nitrogen Supply Checking

The flow of the nitrogen is checked by the flow meter DGF. The flow meter must be connected in such a way that switching-on leads to an alarm. The alarm limit can be adjusted depending on the type of process.

6.2.9 Operating Parameters Saving

As soon as the vacuum pump is working under normal conditions after being switched on:

- Measure the working current of the motor and save it as reference value for all future maintenance and repair work.

6.3 Recommendations on Operation

6.3.1 Application

WARNING

The vacuum pump is designed for use under the conditions specified here.

If these conditions are not met, there is a risk of damage to or total destruction of the vacuum pump and its components!

The vacuum pump may only be switched on under the specified conditions.

The COBRA DS vacuum pumps are designed for use in the field of microelectronics and similar industries.

They can be used to draw in gases and gas mixtures.

WARNING

When using toxic, inflammable and/or explosive gases, make sure that the system corresponds in design to applicable local and national safety regulations and that all applicable safety measures are followed.

All product-specific safety regulations must be observed.

Solid particles must not get into the vacuum pump. Procedural errors can result in the pump drawing in a certain quantity of liquid. If the vacuum pump has drawn in liquid, a short drying time is necessary at the end of the procedure.

The allowed maximum inlet gas temperature depends on the inlet pressure and the type of gas: the lower the inlet pressure (Pa), the higher the drawn gas temperature (TGas) can be.

The following indicative values for air can be considered:

Pa > 50 mbar	TGas < 80°C
Pa < 50 mbar	TGas < 200°C

The vacuum pump is intended for use in a potentially non-explosive environment.

- Make sure that the maximum permissible number of starts does not exceed 2 starts per hour. Those starts should be spread within the hour.

As far as temperature is concerned, the vacuum pump is suitable for continuous duty at any pressure between atmosphere and ultimate pressure.

The vacuum pump is tight down to ultimate pressure.



CAUTION

The surface temperature of the vacuum pump can exceed 50 °C when the vacuum pump is in operation.

Danger of burns!

The vacuum pump may not be touched when it is in operation. If touching the vacuum pump is unavoidable, wait until the surface temperature has cooled down or wear protective gloves.

CAUTION



The sound level of the vacuum pump within a certain perimeter of the vacuum pump is high.

Risk of hearing damage.

Users who are spending a longer period in the vicinity of a non-insulated vacuum pump must wear suitable ear protection.

CAUTION

The COBRA DS vacuum pumps could be delivered without oil, without cooling water and without cooling liquid.

Operation without oil will result in damage to the vacuum pump!

The vacuum pump must remain in a horizontal position when it has been filled with oil.

CAUTION

The COBRA DS vacuum pumps are always delivered without oil, without cooling water and without cooling liquid.

Operation without coolants will result in damage to the vacuum pump!

CAUTION

The cooling water flow, which is checked by the flow meter CWM, must be at least 4 - 5 l/min.

- Make sure that all caps, safeguards, and similar covers are mounted.
- Make sure that the safeguards are switched on.
- Make sure that the inlet and outlet for the cooling air are not covered or closed and that the flow of cooling air is not impaired in any way.
- Make sure that the vacuum pump does not leak. Leakages of dangerous substances must be prevented.
- Make sure that the “Necessary installation instructions” are followed and especially that adequate cooling is ensured.

The following must be noted when the vacuum pump is shut down for a longer period of time:

CAUTION

If there is a risk of frost, all the cooling water must be drained out of the vacuum pump if the pump is shut down for a longer period of time!

- Drain the cooling liquid.
  - Open the drain plug (CLD) under the vacuum pump
  - Unscrew the filler cap (CLF) for the cooling liquid.
  - Drain the cooling liquid completely.
  - Screw on the drain plug (CLD) under the vacuum pump for the cooling liquid.
  - Collect the cooling liquid and recycle it or dispose of it according to local or national regulations.
- Drain the cooling water
- Open the cooling water regulating valve (CWR) and the thermostatic valve (TV)
  - Pull off the connections for the inlet and outlet of the cooling water.
  - Drain the cooling water completely.
  - If necessary, drain the cooling water with the help of compressed air to prevent any risk of frost or corrosion.

NOTE

When the vacuum pump has not been in operation for a few days or when a sticky substance has been drawn, it is possible that the two scroll rotors of the NS (DP) vacuum pump will stick to each other. Screw opens the access cover to the scroll rotors. Loosen the rotors from each other with the help of an Allan key by turning them in clockwise direction by hand.

6.3.2 Switching the Vacuum Pump On/ Off

6.3.2.1 System First Start-up

- Make sure that the “Necessary installation instructions” are followed.

If the vacuum pump is equipped with a solenoid gate valve in the cooling water circuit:

- Open the solenoid gate valve.
- Make sure that the cooling water flow is set correctly:
  - The thermostatic valve TV is preset at 4,5 at works. The position 1 corresponds to around 50° C (minimum) and the position 5 to 90°C maximum. We recommend to use a high valve setting to prevent resublimation in the vacuum pump. Position 5 must not be overthrown. By changing the position of the thermostatic valve, adjust the valve CWR.
- The cooling water flow is factory set on 2 l/min and can be adjusted at the regulating valve CWR. This water circuit is used to cool the motor of the NS pump. It cools also the cylinder and cylinder end plate B-side when temperature of cooling liquid is above 50°C.
- Make sure that the nitrogen flow is set correctly:
- Nitrogen is used as dilution gas. It is injected in the middle hole of cylinder. Nitrogen flow injected in the middle hole is preset at 2 l/min and can be adjusted with valve DGR1, depending on the application. Nitrogen flow injected in the hole on cylinder end plate side is preset at 10 l/min and can be adjusted with valve DGR2.
- Switch on the vacuum pump.
  - Make sure that the vacuum pump does not leak.

If the system is equipped with a solenoid gate valve at the inlet:

- Open the solenoid gate valve.

6.3.2.2 Switching the System Off

If the vacuum pump is equipped with a solenoid gate valve at the inlet:

- Close the solenoid gate valve.

- Switch off the vacuum pump .
- Shut off the nitrogen supply.
- Shut off the cooling water supply.

If the vacuum pump is equipped with a solenoid gate valve in the cooling water circuit:

- Close the solenoid gate valve.

- Make sure that the vacuum pump is currentless.

7 Maintenance



DANGER

Live wires.

Risk of electrical shock!

- Electrical installation work must only be executed by qualified personnel.





DANGER



In case the vacuum pump has conveyed gases that have been contaminated with foreign materials that are dangerous to health, the oil and condensates will also be contaminated.

These foreign materials can infiltrate the pores, recesses, and other internal spaces of the vacuum pump.

Danger to health when the vacuum pump is dismantled.

Danger to the environment.

Always wear protective clothing when carrying out maintenance work.

Before any maintenance work, the inlet and outlet piping as well as the vacuum pump itself must be flushed with nitrogen.

CAUTION

Only authorized personnel may carry out dismantling work on the vacuum pump. Before work begins, the operator of the vacuum pump must fill in a form or a "Declaration of Contamination of Vacuum Equipment and Components" that provides information on possible dangers and appropriate measures.

If this form has not been filled in completely and signed, the vacuum pump may not be dismantled.

CAUTION

Before maintenance work is started, a safety area of at least 610 [mm] around the vacuum pump must be set up.



CAUTION

The surface temperature of the vacuum pump can exceed 50 °C when the vacuum pump is in operation.

Danger of burns!

The vacuum pump may not be touched when it is in operation. If touching the vacuum pump is unavoidable, wait until the surface temperature has cooled down or wear protective gloves.

Before starting maintenance work, make sure that the vacuum pump has been switched off and that it cannot be switched on again accidentally. Follow the shutdown procedure in the section "*Lock Out/Tag Out Procedure* [➔ 44]" depending on the needs of maintenance:

- Stop the pump with the Remote control (RC) (press on STOP button during 10s).
- Press on emergency stop button.
- Switch off the main circuit breaker.
- Open the power box and switch off the circuit breakers.
- Switch off the customer's power supply.
- Switch off the water (inlet first, the outlet) and nitrogen quick connections (pumps cooling is quickly done by not switching off the water connections).
- Depending on the maintenance type, let the vacuum system cool in order to avoid burn (rapid cooling of the vacuum pump wished or not).
- Put the label or warning board "Maintenance processing" on or next to the vacuum pump.



CAUTION

The oil temperature can reach a value of 100°C!
The cooling liquid temperature can reach a value of 100°C!

Danger of burns!

- Make sure that the oil circuit and the coolant circuit have been emptied before moving the vacuum pump.
- Make sure that there are no cleaning tools in the vacuum pump anymore according to local and national regulations.

Before pulling off the different connections, make sure that the inlet and exhaust lines of the vacuum pump correspond to atmospheric pressure

When the maintenance work has been finished, follow the procedure "*Safety Lockout Procedure* [➔ 44]":

- Take off the label or warning board "Maintenance Processing".
- Check the cooling liquid and oil levels according to the chapters "*Oil Level Checking* [➔ 44]" and "*Cooling liquid Level Checking* [➔ 50]".
- Open the power box cover and check that the thermal relays are on position "ON". Then close the power box cover.
- Release the emergency stop button and the lock.
- Switch on the main circuit breaker.
- Release the emergency stop button.
- Switch on the water and nitrogen quick connections (outlet first, then inlet).
- Make sure that the "Necessary Installation Instructions" are followed.
- Start the vacuum pump with the Remote control (RC) (press on START button or with START / STOP button).

7.1 Maintenance Schedule

The maintenance intervals depend very much on the individual operating conditions. The intervals given below are considered as starting values which should be individually shortened or extended as appropriate.

Particularly harsh applications or heavy-duty operation, such as high dust loads in the environment or in the process gas, other contamination or ingress of process material, can make it necessary to shorten the maintenance intervals significantly.

Interval	Maintenance work
Weekly	• Check the oil level, see "*Oil Level Checking* [➔ 44]". • Check the cooling liquid, see "*Cooling Liquid Level Checking* [➔ 50]". • Check the cooling water flow, see "Cooling Water" in "*Additional Checking* [➔ 52]". • Check the nitrogen flow, see "Nitrogen in "*Additional Checking* [➔ 52]". • Check the vacuum pump for oil leaks - in case of leaks have the vacuum pump repaired (contact the manufacturer). • Check the vacuum pump for cooling liquid leaks - in case of leaks have the vacuum pump repaired (contact the manufacturer). • Check the vacuum pump for cooling water leaks - in case of leaks have the vacuum pump repaired (contact the manufacturer).
Monthly	• In the case of operation in a dusty environment: • Make sure that the operating room is clean and free of dust; clean if necessary. • Make sure that the vacuum pump has been switched off and that it cannot be switched on again accidentally. • Check the electrical connections. • Carry out a visual inspection of the vacuum pump.
Yearly	• Make sure that the vacuum pump has been switched off and that it cannot be switched on again accidentally. • Carry out a visual inspection and clean the vacuum pump from dust and dirt • Check the electrical connections and the monitoring devices. • Check the seals and replace if necessary. • Check the inlet and exhaust lines and clean or replace if necessary.

Yearly
If one or more of these accessories are installed.
	• If the inlet is equipped with a sieve:
	  • Check the sieve at the inlet and clean if necessary.
	• Check the measuring and safety equipment for working order.
	• If the exhaust is equipped with a silencer (SI):
	  • Bleed the condensation of the silencer (SI) through the purge system
	• If the exhaust is equipped with a leak-protection non-return valve:
	  • Clean the leak-protection non-return valve.
	• Drain the cooling liquid (see "*Cooling Liquid Draining* [➔ 51]").
	• Check the ventilator filter (RF), clean if necessary.
	• If the cooling water line is equipped with a filter:
	  • Check the filter and clean or replace if necessary.

Interval	Maintenance work
Every 5000 hours or after 1 year	• Change the cooling liquid, see "*Cooling Liquid Draining* [➔ 51]". • Clean the magnetic plugs (MP).
Every 16000 hours or after 4 years	• Change the oil of the gear and bearing housings (both sides), see "*Oil Change* [➔ 47]". • Have a major overhaul on the vacuum pump (contact the manufacturer).

7.1.1 Lock Out/ Tag Out Procedure

- Stop the vacuum pump with the remote control (RC) (press on STOP button during 10s).
- Press on emergency stop button.
- Switch off the main circuit breaker.
- Switch off the customer's power supply.
- Switch off the water and nitrogen quick connections (inlet first, then outlet).
- Put the label or warning board "Maintenance Processing" on or next to the vacuum pump .

7.1.2 Safety Lockout Procedure

- Take off the label or warning board "Maintenance Processing".
- Check the cooling liquid and oil levels according to the chapters "*Oil Level Checking* [➔ 44]" and "*Cooling Liquid Level Checking* [➔ 50]".
- Close the cover.
- Switch on the main circuit breaker.
- Release the emergency stop button.
- Switch on the water and nitrogen quick connections (outlet first, then inlet).
- Make sure that the "Necessary Installation Instructions" are followed.
- Start the vacuum pump with the remote control (RC) (press on START button).

7.2 Oil Checking

7.2.1 Oil Level Checking

- Make sure that the vacuum pump has been switched off and that it cannot be switched on again accidentally.

Indication of the oil level on the various oil sight glasses (OSG 1,2,3,4):

Oil level, pump not operating

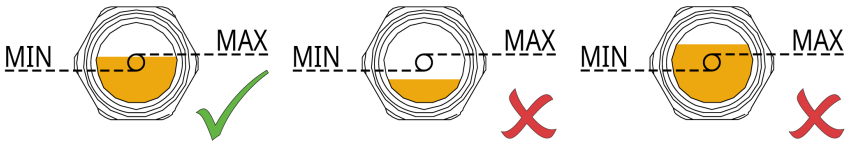

COBRA NS (DP) vacuum pump:

- Make sure that the oil level still lies in the upper level of the target circle on the oil sight glasses.

If the oil level lies below the target circle:

- Top up with oil (see "Refilling oil")

If the oil level exceeds the target circle:

- Check the condensate drain
- Drain the oil (see “Draining the oil”)

Booster (MB):

- Make sure that the oil level still lies in the upper level of the target circle (Booster) on the oil sight glasses.

If the oil level lies below the target circle:

- Top up with oil (see “Refilling oil”)

If the oil level exceeds the target circle:

- Check the condensate drain
- Drain the oil (see “Draining the oil”)

7.2.2 Oil Refilling

- Prepare the needed oil quantity, see *Oil Type / Quantity* [➔ 60].



WARNING

The use of chemically contaminated or polluted oil can lead to hazardous pump conditions which could cause personal injury.

NOTE

Oil does not normally have to be refilled outside the recommended oil change intervals. A drop in the oil level indicates a fault (see "Alarms and warnings -> Manufacturer PLC and LCD").

CAUTION

Only fill in oil through the oil filler opening.

NOTE

The quantity of oil specified in the Instruction Manual is of informative nature only. Check the oil level with the help of various oil sight glasses on the vacuum pump.

CAUTION

Danger of burns when the oil filler cap is open.

Danger of injuries when the oil filler cap is not screwed on properly.

Only unscrew the oil filler cap when the vacuum pump has been switched off.

The vacuum pump may only be switched on when the oil filler cap is properly closed and tight.

We recommend submitting the pump to a leakage rate test in order to ensure the pump is leak tight.

- Make sure that the vacuum pump has been switched off and that it cannot be switched on again accidentally.
- Unscrew the oil filler caps (OFP) of the DP and MB vacuum pumps (if necessary).

COBRA NS (DP) vacuum pump:

- Fill in oil up to the upper level of the target circle of the oil sight glasses.
- Make sure that the oil level is in the upper level of the target circle of the oil sight glasses.
- Make sure that the seals of the filler cap are not damaged and that they sit properly. Replace them if necessary.
- Screw on the filler cap again.

Booster (MB):

- Fill in oil up to the upper level of the target circle of the oil sight glasses.
- Make sure that the oil level is in the upper level of the target circle of the oil sight glasses.
- Make sure that the seals of the filler cap are not damaged and that they sit properly. Replace them if necessary.
- Screw on the filler cap again.

7.2.3 Oil Color Inspection



WARNING

"YLC 250 B" oil chemically contaminated or contaminated by foreign matter.

Risk of explosion!

If the oil becomes dark:

- Contact your manufacturer's representative immediately.

- Make sure that the oil is either light or transparent.

If the oil becomes dark or looks different from the initial color:

- Change the oil immediately, see Oil Change.

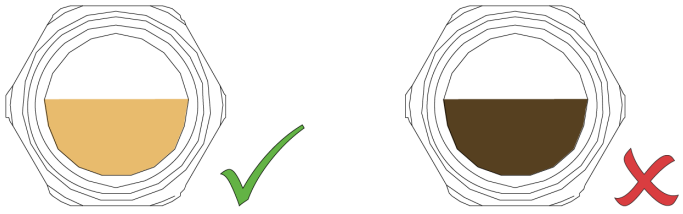

- Contact your representative to find out why the color of the oil has changed.

7.2.4 Oil Change



DANGER



If the vacuum pump has pumped gases that were contaminated with foreign bodies that are hazardous to health, the oil is also contaminated with these foreign bodies.

There is a health hazard when changing contaminated oil. There is also a danger to the environment.

Wear protective clothing when replacing contaminated oil.

Contaminated oil must be treated specially and must be disposed of according to applicable regulations.

7.2.4.1 Used Oil Draining

- Make sure that the vacuum pump is switched off and cannot accidentally be switched on again.
- Make sure that the vacuum pump is vented to atmospheric pressure.

COBRA NS (DP) vacuum pump:

- Put a drain tray underneath the oil drain plugs (ODP).
- Remove the oil drain plugs (ODP).
- Carefully remove the drain plugs.
- Drain the oil.
- Because of wear and tear on the seals replace the current drain plugs with new ones.

When the oil flow has stopped:

- Close the oil drain plugs (ODP).
- Switch on the vacuum pump for a few seconds.
- Make sure that the vacuum pump is switched off and cannot accidentally be switched on again.
- Remove the oil drain plugs again and drain any remaining oil.
- Check that no metal swarf sticks to the magnet of the drain plug, clean if necessary.
- Make sure that the seals of the magnetic plug is undamaged and correctly positioned, replace if necessary.
- Refit the oil drain plugs and tighten up.
- Dispose of the used oil in compliance with applicable regulations.

CAUTION

Because the ends of the drain plugs are magnetic, metal swarf can stick to them. Always clean away this swarf when removing the drain plugs.

Because of wear and tear of the seals, it is recommended to replace the drain plugs whenever the oil is changed.

Booster (MB):

- Put a drain tray underneath the oil drain plugs (ODP).
- Unscrew the oil drain plugs (ODP).
- Drain the oil.

When the oil flow has stopped:

- Refit the oil drain plugs (ODP) again.
- Switch on the vacuum pump for a brief moment and let it run for a few seconds.
- Make sure that the vacuum pump is switched off and cannot accidentally be switched on again.
- Carefully remove the oil drain plugs (ODP) again and drain any remaining oil.
- Make sure that the seals of the drain plugs are not damaged and that they sit properly. Replace them if necessary.
- Refit the oil drain plugs (ODP) and tighten them up.
- Dispose of the used oil in compliance with applicable regulations.

7.2.4.2 New Oil Filling

COBRA NS (DP) vacuum pump:

- Prepare the quantity of oil needed (see "*Oil Type/ Quantity* [➔ 60]").

CAUTION

The use of chemically contaminated or polluted oil can lead to hazardous pump conditions which could cause personal injury.

NOTE

The quantity of oil specified in the Instruction Manual is of informative nature only. Check the oil level with the help of various oil sight glasses on the vacuum pump.

- Make sure that the drain plugs have been fitted properly and do not leak.

CAUTION

Only fill in oil through the oil filler opening.

- Make sure that the vacuum pump has been switched off and that it cannot be switched on again accidentally.
- Unscrew the oil filler cap (OFP)

Oil level, pump not operating

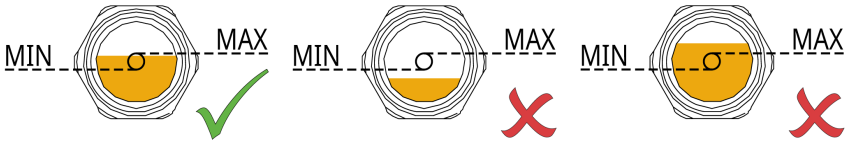

- Fill up to the upper level of the target circle of the oil sight glasses (OSG).
- Make sure that the oil level still lies in the upper level of the target circle on the oil sight glasses.
- Make sure that the seals of the filler cap are not damaged and that they sit properly. Replace them if necessary.
- Screw on the filler cap again.

Booster (MB):

- Prepare the quantity of oil needed (see "*Oil Type/ Quantity* [➔ 60]").

CAUTION

The use of chemically contaminated or polluted oil can lead to hazardous pump conditions which could cause personal injury.

NOTE

The quantity of oil specified in the Instruction Manual is of informative nature only. Check the oil level with the help of various oil sight glasses on the vacuum pump.

- Make sure that the drain plugs have been fitted properly and do not leak.

CAUTION

Only fill in oil through the oil filler opening.

- Make sure that the vacuum pump has been switched off and that it cannot be switched on again accidentally.
- Unscrew the oil filler cap (OFP)

Oil level, pump not operating

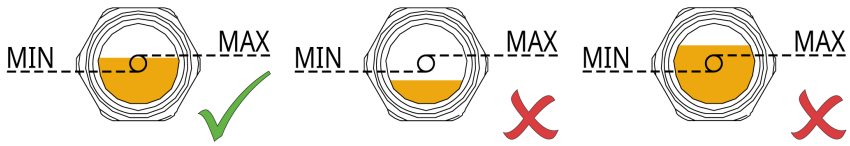

- Fill up to the upper level of the target circle of the oil sight glasses (OSG).
- Make sure that the oil level still lies in the upper level of the target circle on the oil sight glasses.
- Make sure that the seals of the filler cap are not damaged and that they sit properly. Replace them if necessary.
- Screw on the filler cap again.

7.3 Cooling Liquid Checking

7.3.1 Cooling Liquid Level Checking

- Make sure that the vacuum pump has been switched off and that it cannot be switched on again accidentally.
- Let the vacuum pump cool down.
- Check the level of the cooling liquid on the cooling liquid sight glass (CLG)

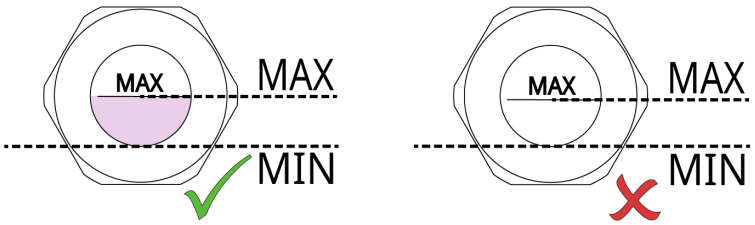

- Unscrew purge cap (CLV) on cylinder upper plate.
- Cooling liquid level should be just under the plate.

If the level is below:

- Top up with cooling liquid (see “Cooling Liquid Refilling”).

7.3.2 Cooling Liquid Refilling

NOTE

Cooling liquid does not normally have to be refilled outside the recommended change intervals. A drop in the level of the liquid indicates a fault (see “Troubleshooting”).

- Make sure that the vacuum pump has been switched off and that it cannot be switched on again accidentally.

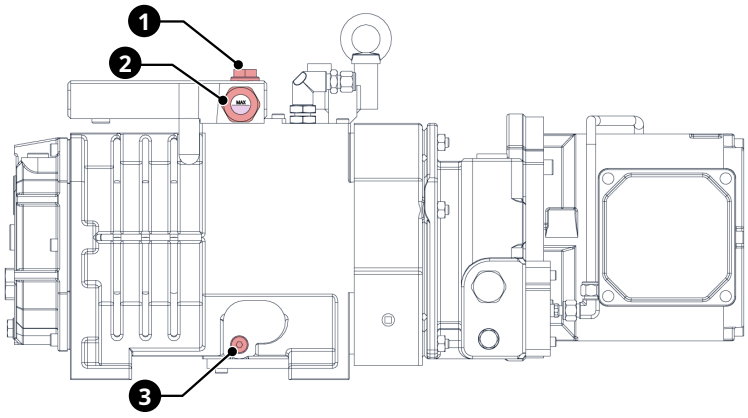

Description			
1	Cooling liquid filling plug (CLF)	2	Cooling liquid sight glass (CLG)
3	Cooling liquid drain plug (CLD)		

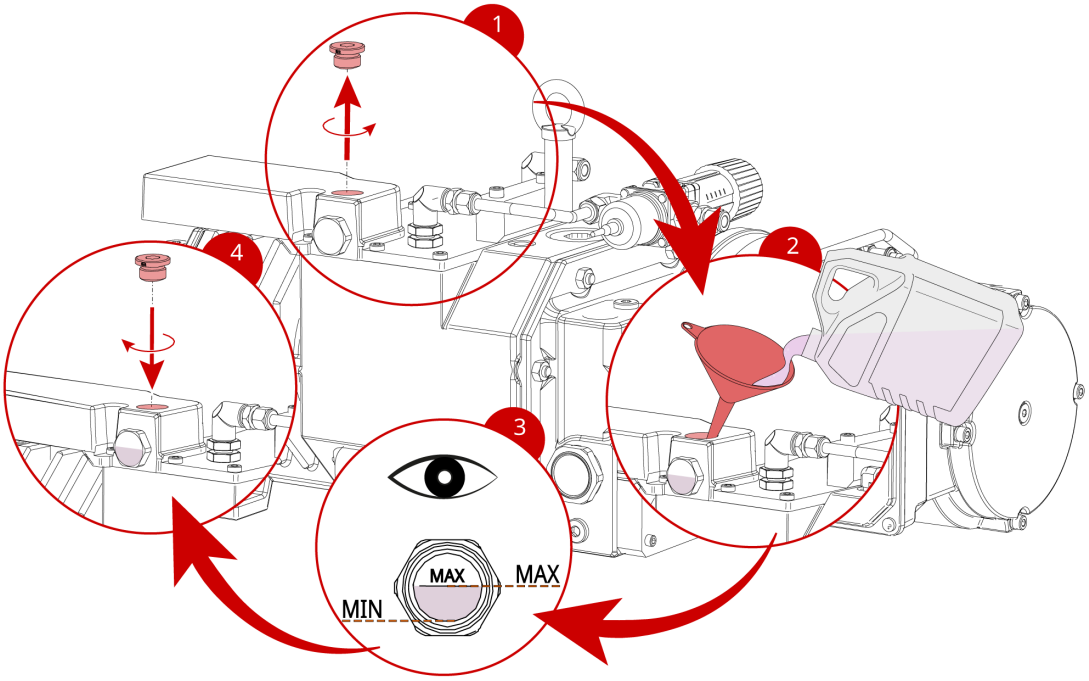

- Check the level of the cooling liquid at the cooling liquid level sight glass (CLG) located on the expansion vessel.
- The level of the cooling liquid in the expansion vessel may never exceed the MAX marking on the cooling liquid level sight glass (CLG).
- Unscrew filler cap (CLF) of cooling liquid on the expansion vessel.
- Fill in the cooling liquid through the filler opening until the liquid comes to the MAX marking of the cooling liquid level sight glass (CLG).
- Stop filling in cooling liquid.
- Check the level of the cooling liquid.
- Screw on the filler cap (CLF) for the cooling liquid again.
- If cooling liquid has run on the outside surfaces of the vacuum pump, wipe it off.
- If liquid has run on to the outside surfaces of the vacuum pump, wipe it off.

7.3.3 Cooling Liquid Draining

- Make sure that the vacuum pump has been switched off and that it cannot be switched on again accidentally.
- Make sure that the vacuum pump has adjusted to atmospheric pressure.
- Place a container under the drain plug (CLD) for the cooling liquid.
- Unscrew filling plug of cooling liquid (CLF).
- Unscrew drain plug of cooling liquid.
- Drain the cooling liquid.

When cooling liquid stops running out:

- Close the drain plug for the cooling liquid.
- Screw filling plug of cooling liquid (CLF).
- Screw the drain plug.
- Switch on the vacuum pump and let it run for a few seconds.
- Make sure that the vacuum pump has been switched off and that it cannot be switched on again accidentally.

- Unscrew the drain plug for the cooling liquid again and drain the remaining liquid.
- Make sure that the seal of the drain plug is not damaged and that it sits properly. Replace it if necessary.
- Screw on the drain plug again.
- Dispose of the used cooling liquid according to applicable environmental protection regulations.

7.3.4 New Cooling Liquid Filling

- Prepare the quantity of cooling liquid needed (see "*Cooling Liquid Type/ Quantity* [➔ 61]").

NOTE

The quantity of cooling liquid specified is of informative nature only. Respect the procedure of filling the cooling liquid.

- Make sure that the drain plug sits properly and does not leak.
- Unscrew the cooling liquid filler cap (CLF).
- Fill in by filler hole until cooling liquid flows reaches the top of cylinder upper plate and below the MAX marking of the cooling liquid sight glass (CLG).
- Stop filling in.
- Close the drain plug.
- Make sure that the seal of the filler cap is not damaged and that they sit properly. Replace them if necessary.
- Screw on the filler cap again.
- Wipe cooling liquid that may have run on outside surfaces of vacuum pump.
- Start the vacuum pump.

7.4 Additional Checking

Subject	Checking
Cooling Water	• Check the cooling water flow. If the flow drops, check for leaks: • Make sure that the cooling water specifications are followed.
Nitrogen	• Check the nitrogen flow. If the flow drops, check for leaks: • Make sure that the nitrogen specifications are followed.
Current Consumption	• Check the current intensity of the motor. An increased intensity is an indication for a fault (see "Troubleshooting").
Silencer (Accessory)	• Make sure that the condensate does not collect at the exhaust of the vacuum pump . • Drain the condensate at the drain opening and collect it in a container. • Dispose of the condensate according to applicable environmental protection regulations. • Check the silencer regularly and clean it if necessary.

Subject	Checking
Leak-protection Non-return Valve (Accessory)	• Check the leak-protection non-return valve regularly and clean it if necessary.

CAUTION



Wear protective clothing when carrying out maintenance work on the silencer and leak-protection non-return valve.

There could still be residues of contamination.

8 Overhaul

CAUTION

Inappropriate maintenance work on the vacuum pump can damage the vacuum pump.

Danger of explosion!

- If requirements are not met, the vacuum pump may not be switched on!
- Should work exceed the dismantling work described in this handbook, it may only be carried out by authorized persons.



WARNING



The machine is contaminated with hazardous material.

Risk of poisoning!

Risk of infection!

If the machine is contaminated with hazardous material:

- Wear appropriate personal protective equipment.

NOTICE

Improper assembly.

Risk of premature failure!

Loss of efficiency!

- Any disassembly of the machine beyond that described in this manual must be carried out by technicians approved by the manufacturer.

If the machine has conveyed gas contaminated with foreign materials which are hazardous to health:

- Decontaminate the machine as much as possible and state the contamination status in a ‘Declaration of Contamination’.

The manufacturer will only accept machine accompanied by a signed, fully completed and legally binding "declaration of contamination", downloadable from the following link: *buschvacuum.com/declaration-of-contamination*.

9 Removal from Service



DANGER

Live wires.

Risk of electrical shock!

- Electrical installation work must only be executed by qualified personnel.



CAUTION

Hot surface.

Risk of burns!

- Before doing anything that requires touching the machine, let it cool down first.



CAUTION

Hot liquids.

Risk of burns!

- Before draining liquids, let the machine cool down first.

9.1 Temporary Removal from Service

Before disconnecting the inlet and exhaust lines and switching off the cooling water and nitrogen lines, make sure that the lines have adjusted to atmospheric pressure.

9.2 Recommissioning

CAUTION

After a long period of inactivity, it is possible that the rotor screws of the COBRA NS vacuum pump are stuck.

Turn the rotor screws manually.

- Make sure that the various protective elements, stoppers, or adhesive tapes have been removed.
- Switch on the vacuum pump by following the procedure described in "*Installation and Commissioning* [➔ 61]".

9.3 Dismantling and Disposal



DANGER



In case the vacuum pump has conveyed gases that have been contaminated with harmful foreign material which are harmful to health, the oil and the condensates will also be contaminated with harmful foreign material.

These foreign materials can infiltrate the pores, recesses, and other internal spaces of the vacuum pump.

Danger to health during dismantling of the vacuum pump.

Danger to the environment.

During dismantling of the vacuum pump protective equipment and clothing must be worn.

Prior to shipping, the vacuum pump must imperatively be decontaminated, and the degree of contamination must be documented in a declaration of decontamination ("Declaration of Decontamination"), which can be downloaded from www.buschvacuum.com.

Used oil and condensates must be disposed of separately in compliance with applicable environmental regulations.

When the product has reached the end of its lifetime:

- Decontaminate the vacuum pump.

CAUTION

Only authorized personnel may carry out dismantling work on the vacuum pump. Before work begins, the operator of the vacuum pump must fill in a form or a "Declaration of Decontamination" that provides information on possible dangers and appropriate measures.

If this form has not been filled in completely and signed, the vacuum pump may not be dismantled.

- Drain the oil.
- Dispose of the oil according to local environmental protection regulations.
- Drain the cooling liquid.
- Dispose of the cooling liquid according to local environmental protection regulations.
- Begin dismantling the vacuum pump.

CAUTION



During dismantling of the vacuum pump protective equipment and clothing must be worn.

- Dispose of the vacuum pump as scrap metal.
- Dispose of the individual parts of the machine according to local regulations.

A lithium battery is present inside the PLC:

- Eliminate the lithium battery according to local and national regulations in place, relating to environment.

10 Spare Parts

NOTICE

Use of non-manufacturer genuine spare parts.

Risk of premature failure!

Loss of efficiency!

- Use only manufacturer genuine spare parts, consumables and supplies to ensure correct operation of the machine and to validate the warranty.

There are no standard spare parts kits available for this product.

For manufacturer genuine spare parts:

- Contact your manufacturer representative.

11 Troubleshooting



DANGER

Live wires.

Risk of electrical shock!

- Electrical installation work must only be executed by qualified personnel.



CAUTION

Hot surface.

Risk of burns!

- Before doing anything that requires touching the machine, let it cool down first.



CAUTION

Hot liquids.

Risk of burns!

- Before draining liquids, let the machine cool down first.

Problem	Possible Cause	Remedy
The machine does not start.	The motor is not supplied with the correct voltage.	• Check the power supply.
	The rotors are jammed or seized.	• Turn the screw rotors manually from the rotor access plug (PMR). • Repair the machine (contact the manufacturer).
	Solid foreign matter has entered the machine.	• Remove the solid foreign matter or repair the machine (contact the manufacturer). • Install an inlet filter if necessary.
	A temperature sensor has reached the switch point.	• Let the machine cool down. • See problem “The machine runs too hot”.
	Corrosion in the machine from remaining condensate.	• Repair the machine. • Check the process and follow the recommendation in case of conveying condensable vapors.
	The motor is defective.	• Replace the motor.

Problem	Possible Cause	Remedy
The machine does not reach the usual pressure at the inlet connection.	Suction or exhaust lines too long or section diameter too small.	• Use larger diameter or shorter lines. • Seek advice from your local manufacturer representative.
	Process deposits on the pumping components	• Flush the machine.
	If an inlet screen or an inlet filter is installed, it can be partially clogged.	• Clean the inlet screen or replace the inlet filter cartridge.
	The machine runs in the wrong direction.	• Check the direction of rotation, see Wiring Diagram Three-Phase Motor (Pump Drive).
	Internal parts are worn or damaged.	• Repair the machine (contact the manufacturer).
The machine runs very noisily.	Wrong oil quantity or unsuitable oil type.	• Use one of the recommended oils in the correct quantity, see Oil.
	Defective gears, bearings or coupling element.	• Repair machine (contact the manufacturer).
The machine runs too hot.	Insufficient cooling.	• Make sure to comply with the cooling water requirements, see Cooling Water Connection.
	Ambient temperature too high.	• Observe the permitted ambient temperature, see Technical Data.
	Temperature of the process gases at the inlet too high.	• Observe the permitted gas inlet temperature, see Technical Data.
	The cooling water pump is defective.	• Repair the machine.
	Oil level too low.	• Top up oil.
The oil is black.	Oil change intervals are too long.	• Drain the oil and fill in new oil, see Oil Change.
	The machine runs too hot.	• See problem "The machine runs too hot".

For resolution of problems not listed in the troubleshooting table, contact your manufacturer representative.

12 Oil Type / Quantity

12.1 Oil Type

Make sure that the oil type corresponds to specifications:

	YLC 250 B
ISO-VG	250
Oil Type	Synthetic
Article number 0.5 L packaging	0831 131 400
Article number 1 L packaging	0831 108 878
Article number 5 L packaging	0831 108 879

Oil suitability

- **Oil YLC 250 B**: Mandatory oil for specific applications.

CAUTION

The use of chemically contaminated or polluted oil can lead to hazardous pump conditions which could cause personal injury.

12.2 Oil Quantity

The quantity of oil specified in the following table is of informative nature only. Check the oil level with the help of the various oil sight glasses on the vacuum pump.

Oil filling	MB pump motor side (A – liters)	MB pump gear side (B – liters)	DP pump motor side (A – liters)	DP pump gear side (B – liters)
DS 0080 G	-	-	1.2	0.5
DS 0160 G	-	-	1.2	0.5
DS 0700 G	0.6	0.8	1.2	0.5
DS 1000 G	0.6	0.8	1.2	0.5
DS 2000 G	1.2	1.5	1.2	0.5
Oil type	YLC 250 B, Art. No. 0831 131 400 (0,5 l ≈ 1 kg)			

13 Cooling Liquid Type / Quantity

13.1 Cooling Liquid Type

Make sure that the Cooling Liquid type corresponds to specifications:

	CLA 25 (ready-to-use)
Part number 5 L packaging	2000 241 757
Part number 25 L packaging	2000 241 738

CLA 25 cooling liquid is ready-to-use and requires no additional water.

For more information, contact your manufacturer representative.

13.2 Cooling Liquid Quantity

The quantity of cooling liquid specified in this Instruction Manual is of informative nature only. Respect the procedure of filling the cooling liquid.

Cooling liquid filling	NS 0070 / 0160 C
Cooling liquid quantity (Liter)	4 liters
Cooling liquid type	Glycol (Ethylene), Art. No. 2000 241 757, CLA 25 (already mixed ready-to-use)

CAUTION

The proportion of pure glycol and water for the cooling liquid corresponds to a percentage of 40% pure glycol and 60% water. It is therefore not necessary to prepare the mix before use. But when using pure glycol, it is imperative to prepare the mix prior to filling the vacuum pump and to respect this proportion.

14 Technical Data

		DS 0080 G	DS 0160 G	DS 0700 G
Nominal pumping speed	m^3/h (50 / 60 Hz)	70 / 85	140 / 160	500 / 610
	ACFM (50 / 60 Hz)	40 / 50.0	82 / 94.2	290 / 359.0
Ultimate pressure	Torr hPa (mbar)	0.0225 / 0.03	0.0225 / 0.03	0.00225 / 0.003
Nominal motor rating backing pump	kW (50 / 60 Hz)	4.0/ 4.4	5.5 / 6.6	4.0 / 4.4
Nominal motor rating vacuum booster	kW (50 / 60 Hz)	–	–	4.0 / 4.4
Power consumption at ultimate pressure	kW (50 / 60 Hz)	2.6 / 3.2	4.3 / 5.2	3.0 / 3.6
Power consumption at ultimate pressure / idle mode	kW	–	–	3.0 / 3.6
Maximal intensity Δ	A	35	35	35
Nominal motor speed backing pump	min^{-1} (50 / 60 Hz)	3000 / 3600	3000 / 3600	3000 / 3600
Nominal motor speed vacuum booster	min^{-1} (50 / 60 Hz)	–	–	3000 / / 3600
Sound pressure level (ISO 2151), KpA = 3 dB *	dB(A) (50 / 60 Hz)	< 62 / < 62	< 68 / < 68	< 62 / < 62
Ambient temperature	°C	0 ... 40	0 ... 40	0 ... 40
	°F	32 ... 104	32 ... 104	32 ... 104
Maximum allowable counter pressure at exhaust connection	hPa (mbar)	200	200	200
Water consumption	l/min	4.0	4.0	5.0
Cooling water temperature	°C	10 - 25	10 - 25	10 - 25
Cooling water pressure	bar / ΔP	2 - 5	2 - 5	2 - 5
Nitrogen consumption	l/min	0 – 75	0 – 75	0 – 75
Nitrogen overpressure	bar	1.5	1.5	1.5
Weight approx.	kg	276	338	445

***** With silencer at exhaust.

		DS 1000 G	DS 2000 G
Nominal pumping speed	m^3/h (50 / 60 Hz)	775 / 960	1365 / 1640
	ACFM (50 / 60 Hz)	447 / 565.0	790 / 965.1
Ultimate pressure	Torr hPa (mbar)	0.00225 / 0.003	0.00225 / 0.003
Nominal motor rating backing pump	kW (50 / 60 Hz)	4.0 / 4.4	5.5 / 6.6
Nominal motor rating vacuum booster	kW (50 / 60 Hz)	4.0 / 4.4	5.5 / 6.6
Power consumption at ultimate pressure	kW (50 / 60 Hz)	3.3 / / 4.0	5.6 / 6.8
Power consumption at ultimate pressure / idle mode	kW	3.3 / 4.0	5.6 / 6.8
Maximal intensity Δ	A	35	35
Nominal motor speed backing pump	min^{-1} (50 / 60 Hz)	3000 / 3600	3000 / 3600
Nominal motor speed vacuum booster	min^{-1} (50 / 60 Hz)	3000 / 3600	3000 / 3600
Sound pressure level (ISO 2151), KpA = 3 dB *	dB(A) (50 / 60 Hz)	< 62 / < 62	< 68 / < 68
Ambient temperature	°C	0 ... 40	0 ... 40
	°F	32 ... 104	32 ... 104
Maximum allowable counter pressure at exhaust connection	hPa (mbar)	200	200
Water consumption	l/min	5.0	5.0
Cooling water temperature	°C	10 - 25	10 - 25
Cooling water pressure	bar / ΔP	2 - 5	2 - 5
Nitrogen consumption	l/min	0 – 75	0 – 75
Nitrogen overpressure	bar	1.5	1.5
Weight approx.	kg	576	668

* With silencer at exhaust.

15 EU Declaration of Conformity

This Declaration of Conformity and the CE-markings affixed to the name plate are valid for the machine within the Busch scope of delivery. This Declaration of Conformity is issued under the sole responsibility of the manufacturer.

When this machine is integrated into a superordinate machinery, the manufacturer of the superordinate machinery (this can be the operating company, too) must conduct the conformity assessment process for the superordinate machine or plant, issue the Declaration of Conformity for it and affix the CE-marking.

The manufacturer

Pfeiffer Vacuum Korea,
123-40 Injusandan-ro,
Inju-myeon, Asan-si,
Chungcheongnam-do, 31435,
Republic of Korea

declares that the machine: vacuum pump COBRA DS 0080 G; COBRA DS 0160 G; COBRA DS 0700 G; COBRA DS 1000 G; COBRA DS 2000 G

fulfill(s) all the relevant provisions from EU directives or regulations:

- 'Machinery Directive' 2006/42/EC, if the serial number is less than or equal to KRM127029999 (until January 19, 2027).
- 'Machinery Regulation' (EU) 2023/1230, if the serial number is greater than or equal to KRM127030000 (from January 20, 2027). The conformity assessment has been carried out according to internal production control procedure (Module A), in accordance with the requirements of the 'Machinery Regulation'.
- 'Electromagnetic Compatibility' (EMC) 2014/30/EU
- 'RoHS' 2011/65/EU Restriction of the use of certain hazardous substances in electrical and electronic equipment (incl. all related applicable amendments)
- 'Cyber Resilience Act' [1], Regulation (EU) 2024/2847, if the serial number is greater than or equal to KRM127480000 (from December 11, 2027). The conformity assessment has been carried out according to internal production control procedure (Module A), in accordance with the requirements of the 'Cyber Resilience Act'.

and comply(-ies) with the following harmonized standards, common specifications or other technical specifications:

Standard	Title of the Standard
EN ISO 12100 : 2010	Safety of machinery - Basic concepts, general principles of design
EN 1012-2 : 1996 + A1 : 2009	Vacuum pumps - Safety requirements - Part 2
EN ISO 13857 : 2019	Safety of machinery - Safety distances to prevent hazard zones being reached by the upper and lower limbs
EN ISO 2151 : 2008	Acoustics - Noise test code for compressors and vacuum pumps - Engineering method (grade 2)
EN IEC 63000 : 2018	Technical documentation for the assessment of electrical and electronic products with respect to the restriction of hazardous substances
EN IEC 61000-6-2 : 2019	Electromagnetic compatibility (EMC) - Generic standards. Immunity for industrial environments
EN IEC 61000-6-4 : 2019	Electromagnetic compatibility (EMC) - Generic standards. Emission standard for industrial environments
EN IEC 62443-3-3 : 2019	Industrial communication networks - Network and system security - Part 3-3: System security requirements and security levels

Legal person authorized to compile the technical file and authorized representative in the EU (if the manufacturer is not located in the EU):
Busch Dienste GmbH, Schauinslandstr. 1, DE-79689 Maulburg

Asan-si, 2026.10.01

Jeihong Kim

Jeihong Kim

General Manager

Pfeiffer Vacuum Korea

[1] The **'Cyber Resilience Act'** regulation is applicable if the machine is delivered ex-factory with digital elements containing programmable or digital functions, such as a control box, a VSD (Variable Speed Drive), an OTTO IoT Box, a Busch PLC (Programmable Logic Controller) ...

16 UK Declaration of Conformity

This Declaration of Conformity and the UKCA-markings affixed to the name plate are valid for the machine within the Busch scope of delivery. This Declaration of Conformity is issued under the sole responsibility of the manufacturer.

When this machine is integrated into a superordinate machinery, the manufacturer of the superordinate machinery (this can be the operating company, too) must conduct the conformity assessment process for the superordinate machine or plant, issue the Declaration of Conformity for it and affix the UKCA-marking.

The manufacturer

Pfeiffer Vacuum Korea,
123-40 Injusandan-ro,
Inju-myeon, Asan-si,
Chungcheongnam-do, 31435,
Republic of Korea

declares that the machine: vacuum pump COBRA DS 0080 G; COBRA DS 0160 G; COBRA DS 0700 G; COBRA DS 1000 G; COBRA DS 2000 G

fulfill(s) all the relevant provisions from UK legislations:

- Supply of Machinery (Safety) Regulations 2008
- Electromagnetic Compatibility Regulations 2016
- Restriction of the use of certain hazardous substances in Electrical and Electronic Equipment Regulations 2012

and comply(-ies) with the following designated standards, common specifications or other technical specifications:

Standard	Title of the Standard
EN ISO 12100 : 2010	Safety of machinery - Basic concepts, general principles of design
EN 1012-2 : 1996 + A1 : 2009	Vacuum pumps - Safety requirements - Part 2
EN ISO 13857 : 2019	Safety of machinery - Safety distances to prevent hazard zones being reached by the upper and lower limbs
EN ISO 2151 : 2008	Acoustics - Noise test code for compressors and vacuum pumps - Engineering method (grade 2)
EN IEC 63000 : 2018	Technical documentation for the assessment of electrical and electronic products with respect to the restriction of hazardous substances
EN IEC 61000-6-2 : 2019	Electromagnetic compatibility (EMC) - Generic standards. Immunity for industrial environments
EN IEC 61000-6-4 : 2019	Electromagnetic compatibility (EMC) - Generic standards. Emission standard for industrial environments
EN IEC 62443-3-3 : 2019	Industrial communication networks - Network and system security - Part 3-3: System security requirements and security levels

Legal person authorized to compile the technical file and importer in the UK (if the manufacturer is not located in the UK):
Busch (UK) Ltd, 30 Hortonwood, Telford – UK

Asan-si, 2026.10.01

Jeihong Kim

Jeihong Kim

General Manager

Pfeiffer Vacuum Korea

Notes

BUSCH GROUP

The Busch Group is one of the world's largest manufacturers of vacuum pumps, vacuum systems, blowers, compressors and gas abatement systems. Under its umbrella, the group houses two well-known brands: Busch Vacuum Solutions and Pfeiffer Vacuum+Fab Solutions. Together, they offer solutions to a wide range of industries. A global network of highly competent local teams in 44 countries ensures that expert, tailor-made support is always available near you. Wherever you are. Whatever your business.



- Busch Group companies
- Busch Group production sites
- Busch Group service centers
- Busch Group local representatives

www.buschvacuum.com

www.pfeiffer-vacuum.com

2000248111 | A0_en-US