ATP 1603 M

Turbomolecular vacuum pumps

PFEIFFER
VACUUM+FAB SOLUTIONS

Part of the BUSCH GROUP

Quiet

Low noise and vibration levels, perfectly suited for vibration-sensitive applications in semiconductor manufacturing processes and analytical instrumentation

Flexible

Compatible with a variety of backing pumps, excellent compression ratio for light gases

Maintenance-free

No wearing parts thanks to magnetic bearing technology, long maintenance intervals

Accessories, spare parts and options

- Installation kit
- Cooling water valve
- Purge gas valve
- Handheld remote controller
- Inlet protection screen
- Heater unit
- Valve cable and coil
- Various inlet flange types
- Various user interfaces

© Pfeiffer Vacuum

ATP 1603 M

Turbomolecular vacuum pumps

PFEIFFER VACUUM+FAB SOLUTIONS

Part of the BUSCH GROUP

Dimensional drawing

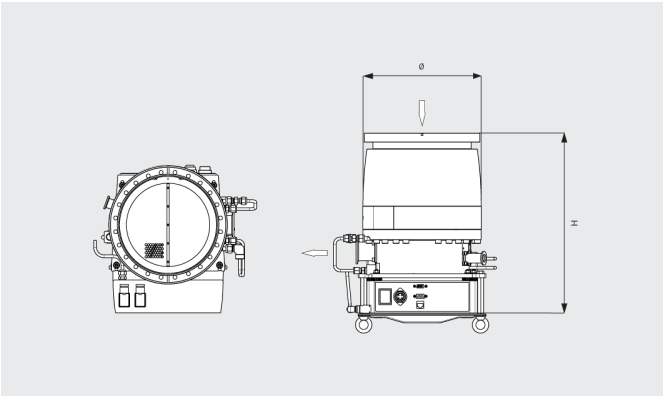

Pumping speed

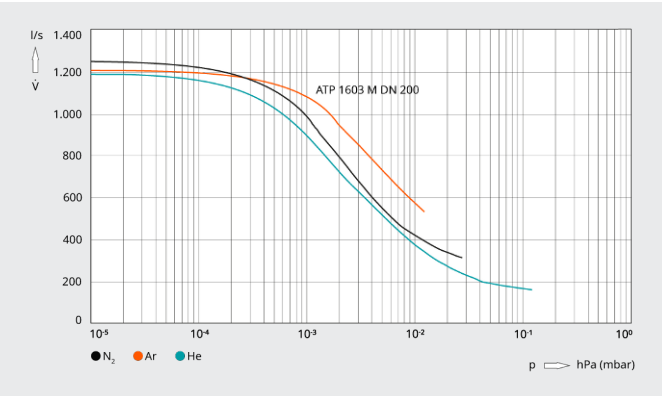

ATP 1603 M	
Pumping speed N_2	1250 l/s
Pumping speed Ar	1180 l/s
Pumping speed He	1220 l/s
Pumping speed H_2	990 l/s
Compression ratio (ISO 5302) N_2	$> 1 \cdot 10^7$ l/s
Compression ratio (ISO 5302) Ar	$> 1 \cdot 10^8$ l/s
Compression ratio (ISO 5302) He	$2 \cdot 10^4$ l/s
Compression ratio (ISO 5302) H_2	$3.5 \cdot 10^3$ l/s
Ultimate pressure	$< 1 \cdot 10^{-8}$ mbar
Max. forevacuum N_2	0.8 mbar
Max. forevacuum Ar	1.5 mbar
Max. inlet vacuum N_2	0.4 mbar
Max. inlet vacuum Ar	0.027 mbar
Gas throughput at final rotational speed Ar	600 sccm
Rotational speed	37000 rpm
Rotational speed variable	15000 rmp to nominal speed

ATP 1603 M

Turbomolecular vacuum pumps

PFEIFFER VACUUM+FAB SOLUTIONS

Part of the BUSCH GROUP

ATP 1603 M	
Run-up time up to 90% of final rotational speed, with pressure exhaust < 0.1 mbar	< 5.3 min
Controller power supply	200-240 V, 50/60 Hz Single-phase
Max. power consumption for start-up	800 W
Nominal power (stand-by power)	120 W
Max. baking temperature	120 °C
Recommended backing pump	ADP/ADS
Sound pressure level (ISO 2151) 1m distance at nominal speed	< 48 dB(A)
Vibration level at nominal speed	< 0.01 µm
Dimensions (Ø x H)	259 x 386* mm
Gas inlet / outlet	DN 200 / DN 40 ISO-KF
N_2 purge flange	DN 16 ISO-KF
Stainless steel inlet screen (factory setting)	yes
Permissible magnetic field (radial value) at 10 cm	< 12 mT
On-board control option	Profibus, Remote

* depending on flange variant

DO YOU WANT TO KNOW MORE?

Get in touch with us directly!

CONTACT FORM

© Pfeiffer Vacuum