ASM 390/392

Leak detectors

PFEIFFER
VACUUM+FAB SOLUTIONS

Part of the BUSCH GROUP

High performance

Fast start-up, high pumping speed, perfectly suited for demanding applications in clean environments

Flexible

Compact and ergonomic design, easy access to all testing areas

User-friendly

Large and rotatable color touch display, integrated tool box and storage space

Accessories, spare parts and options

- Sniffer probe with 5 or 10 m hose length
- Helium spray gun
- Remote control
- Bottle holder
- Dust filter

© Pfeiffer Vacuum

ASM 390/392

Leak detectors

PFEIFFER VACUUM+FAB SOLUTIONS

Part of the BUSCH GROUP

Dimensional drawing

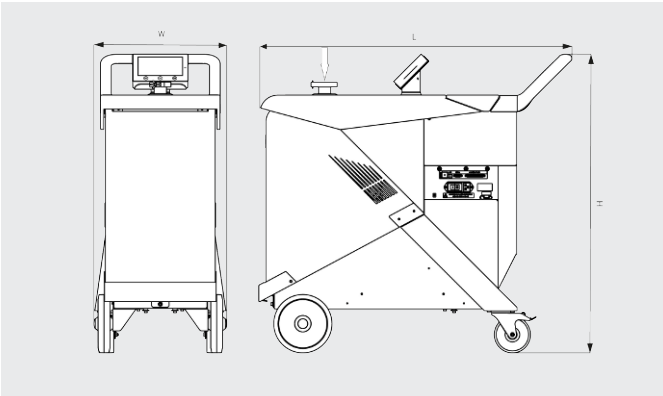

	ASM 390	ASM 392
Test method	Spraying and sniffing tests	Spraying and sniffing tests
Detectable gases	^{4}He; ^{3}He; H_2	^{4}He; ^{3}He; H_2
Min. detectable leak rate for Helium (spraying test)	$1 \cdot 10^{-12}$ mbar l/s / $1 \cdot 10^{-13}$ Pa m^3/s	$1 \cdot 10^{-12}$ mbar l/s / $1 \cdot 10^{-13}$ Pa m^3/s
Min. detectable leak rate for Helium (sniffing test)	$1 \cdot 10^{-8}$ mbar l/s / $1 \cdot 10^{-9}$ Pa m^3/s	$1 \cdot 10^{-8}$ mbar l/s / $1 \cdot 10^{-9}$ Pa m^3/s
Pumping speed for Helium	10 l/s	25 l/s
Power supply	100-240 V (50/60 Hz)	100-240 V (50/60 Hz)
Power consumption	800 W	800 W
Max. power consumption	1600 W	1600 W
Max. test inlet pressure	20 mbar	20 mbar
Start-up time (20 °C)	<2 min	<2 min
Response time	<1 s	<1 s
Backing pump	Multi-stage Roots vacuum pump	Multi-stage Roots vacuum pump
Roughing capacity	35 m^3/h	35 m^3/h
Operating temperature	10-35 °C	10-35 °C
Communication interfaces	I/O, RS-232, Ethernet (PC, not industrial)	I/O, RS-232, Ethernet (PC, not industrial)
Sound pressure level	≤ 55 dB(A)	≤ 55 dB(A)

ASM 390/392

Leak detectors

PFEIFFER VACUUM+FAB SOLUTIONS

Part of the BUSCH GROUP

	ASM 390	ASM 392
Weight approx.	125 kg	130 kg
Dimensions (L x W x H)	1072 x 455 x 1025 mm	1072 x 455 x 1025 mm
Inlet port	DN 40 ISO-KF	DN 40 ISO-KF

DO YOU WANT TO KNOW MORE?

Get in touch with us directly!

CONTACT FORM

© Pfeiffer Vacuum